Module C

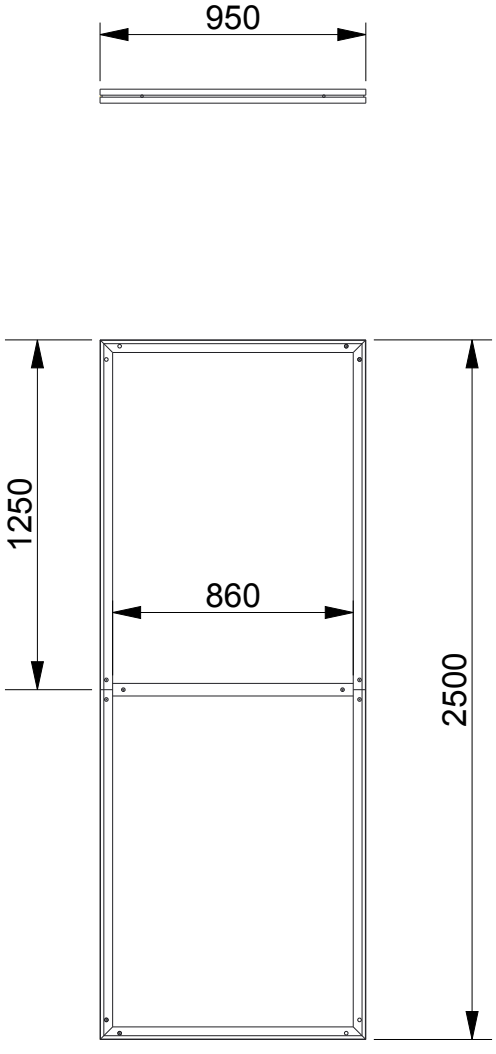

module size: 950 x 2500 mm
graphic size: gross: 986 x 2536 mm, net: 950 x 2500 mm

scale 1:1
graphic size:

gross: 986 x 2536 mm
net: 950x2500 mm