IKA

designed for scientists

RH basic
RH lite

ENGLISH

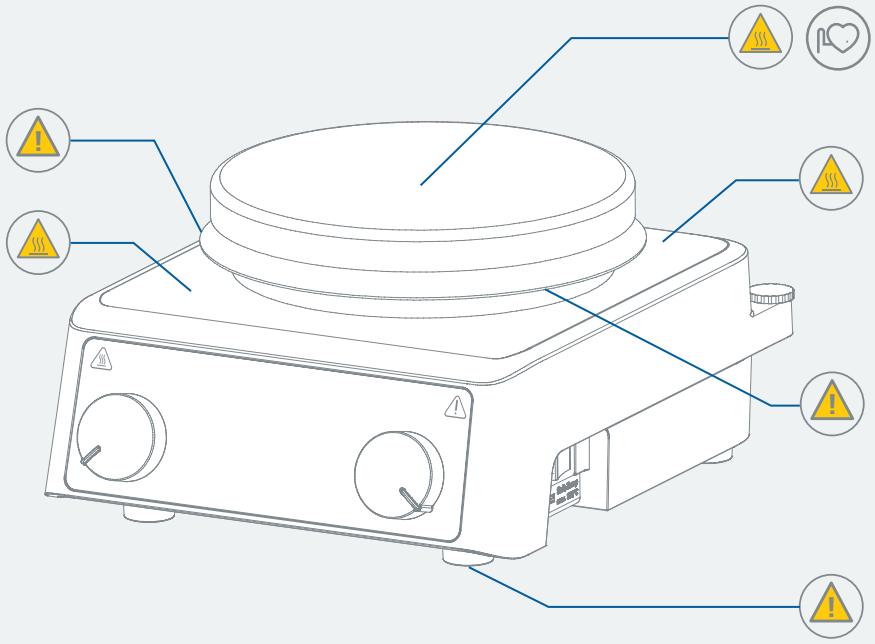

Fig. 1

EU Declaration of conformity 6

Explication of warning symbols 6

Safety instructions 7

Intended use 10

Unpacking 11

Operator panel and display 12

Installation 14

Operation 17

Maintenance and cleaning 23

Accessories 23

Technical Data 24

Warranty 25

Source language: German

EU Declaration of conformity

We declare under our sole responsibility that this product corresponds to the directives 2014/35/EU, 2006/42/EC, 2014/30/EU and 2011/65/EU and conforms with the following standards or normative documents: EN 61010-1, EN 61010-2-010, EN 61010-2-051, EN 61326-1, EN 60529 and EN ISO 12100.

A copy of the complete Declaration of Conformity or further declarations of conformity can be requested at **sales@ika.com**.

Explication of warning symbols

/// Warning symbols

Danger! Indicates an (extremely) hazardous situation, which, if not avoided, will result in death, serious injury.

Warning! Indicates a hazardous situation, which, if not avoided, can result in death, serious injury.

Caution! Indicates a potentially hazardous situation, which, if not avoided, can result in injury.

Notice! Indicates practices which, if not avoided, can result in equipment damage.

Attention! Indicates the risks due to magnetism.

Danger! Indicates the exposure to a hot surface.

/// General Symbols

A— Position number
Indicates device components relevant to actions.

Correct / result
Indicates the correct execution or the result of an action step.

Wrong
Indicates the incorrect execution of an action step.

Note
Indicates steps of actions that require particular attention.

Beep
Indicates action steps, for which beep sounds are to be heard.

Safety instructions

/// General information

- **Read the operating instructions completely before starting up and follow the safety instructions.**
- Keep the operating instructions in a place where it can be accessed by everyone.
- Ensure that only trained staff work with the device.
- Follow the safety instructions, guidelines, occupational health and safety and accident prevention regulations.
  This includes, in particular, measures to control foreseeable malfunctions, such as preventing the unintentional release or leakage of media in the event of a malfunction. Failure to take these measures may result in serious injury, contamination, equipment damage, or operational disruption.
- The device must only be used in a technically perfect condition.

Notice!
- Pay attention to the marked sites in **Fig. 1**.

/// Device design

Attention – Magnetism!
- Effects of the magnetic field have to be taken into account (e.g. data storage media, cardiac pacemakers ...).

Notice!
- Set up the device in a spacious area on an even, stable, clean, non-slip, dry and fireproof surface.
- Observe the minimum distances:
  - between devices min. 100 mm,
  - between device and wall min. 100 mm,
  - above the device min. 800 mm.
- The feet of the device must be clean and undamaged.
- Keep the base plate clean.
- Ensure that the power cord set / temperature sensor cable does not touch the heating plate.
- Do not cover the device, even partially e.g. with metallic plates or film. This may result in overheating.

/// Working with the device

Danger!
- Do not use the device in explosive atmospheres, it is not EX-protected.
- With substances capable of forming an explosive mixture, appropriate safety measures must be applied, e.g. working under a fume hood.
- To avoid body injury and property damage, observe the relevant safety and accident prevention measures when processing hazardous materials.

Danger!
- Exercise caution when touching parts of the housing and the heating plate.
- The heating plate can reach dangerous temperatures. Pay attention to the residual heat on the heating plate after switching off the stirrer.
- The device may only be transported when the heating plate has cooled down.

Warning!

- Only process media that will not react dangerously to the extra energy produced through processing. This also applies to any extra energy produced in other ways, e.g. through light irradiation.
- Beware of hazards due to:
  - flammable materials,
  - combustible media with a low boiling temperature,
  - glass breakage,
  - incorrect container size,
  - overfilling of media,
  - unsafe condition of container.
- Process pathogenic materials only in closed vessels under a suitable fume hood.
- The safety temperature must be set in accordance with EN 61010-2-010 Chapter "Requirements for devices containing or using flammable liquids".
  - The surface temperature of the flammable medium that is exposed to air may not exceed its flash point.
    A danger usually arises if a medium is heated in open vessels.
  - The surface temperature of the heating device may not exceed the value of (***t*** - 25) °C (= set value of the safety circuit) on the surface of the flammable medium and in contact with air, whereby ***t*** is the fire point of the liquid.
    A danger usually arises if a medium is heated in glass vessels (glass breakage).

  If a setting made by the user (medium temperature or safety temperature) could bring a flammable medium into a state in which the conditions mentioned above could be exceeded, additional measures must be introduced that will protect the user from this danger.

Caution!

- Wear your personal protective equipment in accordance with the hazard category of the media to be processed. There may be a risk from:
  - splashing and evaporation of liquids,
  - ejection of parts,
  - release of toxic or combustible gases.
- Reduce speed if:
  - medium splashes out of vessel because the speed is too high,
  - device is not running smoothly,
  - container moves on the base plate,
  - an error occurred.
- The heating plate can heat up due to the action of the magnets at high motor speeds, even if the heater is switched off.
- Please consider any possible contaminations and unwanted chemical reactions.
- It may be possible for wear debris from rotating accessory parts to reach the material being processed.
- When using PTFE-coated magnetic bars, the following has to be noted: Chemical reactions of PTFE occur in contact with molten or solute alkali metals and alkaline earth metals, as well as with fine powders of metals in groups 2 and 3 of the periodic system at temperatures above 300 °C – 400 °C. Only elementary fluorine, chlorotrifluoride and alkali metals attack it; halogenated hydrocarbons have a reversible swelling effect.
  (Source: Römpps Chemie-Lexikon and "Ulmann", Volume 19)

/// Accessories

- Protect the device and accessories from bumps and impacts.
- Check the device and accessories for damage before each use. Do not use damaged components.
- Safe operation is guaranteed only with the use of original IKA accessories.
- Ensure that the external temperature sensor is inserted into the medium to a depth of at least 20 mm when connected.
- Always disconnect the plug before attaching accessories.
- Accessories must be securely attached to the device and cannot come off by themselves. The centre of gravity of the assembly must lie within the surface on which it is set up.
- Observe the operating instructions of the accessories.

/// Power supply / Switching off the device

- The voltage stated on the type plate must correspond to the power voltage.
- The device can only be disconnected from the power supply by pulling out the power plug or the connector plug.
- The socket for the power cord must be easily accessible.
- Socket must be earthed (protective ground contact).

/// Maintenance

- The device must only be opened by trained specialists, even during repair. The device must be unplugged from the power supply before opening. Live parts inside the device may still be live for some time after unplugging from the power supply.

/// Disposal instructions

- The device, accessories and packaging must be disposed of in accordance with local and national regulations.

Intended use

/// Use

› The magnetic stirrer is suitable for mixing and / or heating substances.

/// Area of use

› Indoor environments similar to that a laboratory of research, teaching, trade or industry area.
› The safety of the user cannot be guaranteed:
- if the device is operated with accessories that are not supplied or recommended by the manufacturer,
- if the device is operated improperly or contrary to the manufacture's specifications,
- if the device or the printed circuit board are modified by third parties.

Unpacking

/// Unpacking

› Unpack the device carefully. Any damage should immediately be reported to the carrier (mail, rail or freight forwarding company).

/// Scope of delivery

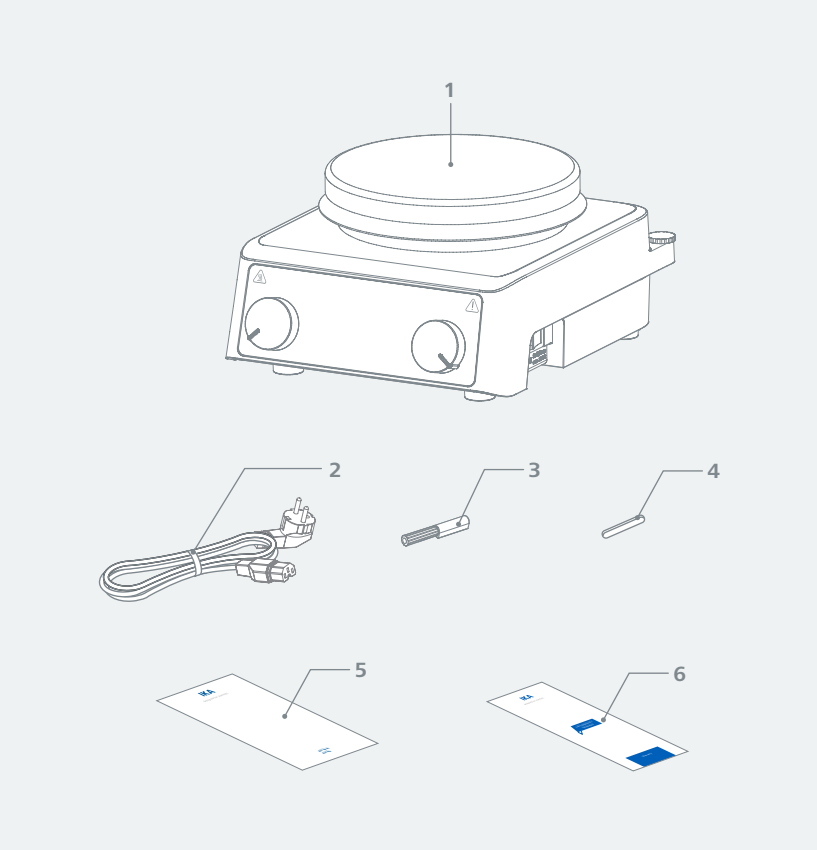

1	**RH** basic / **RH** lite
2	Power cord set
3	Screwdriver (safety circuit)
4	Magnetic stirring bar **IKAFLON 30 round**
5	User guide
6	Warranty card

Operator panel and display

/// Operator panel

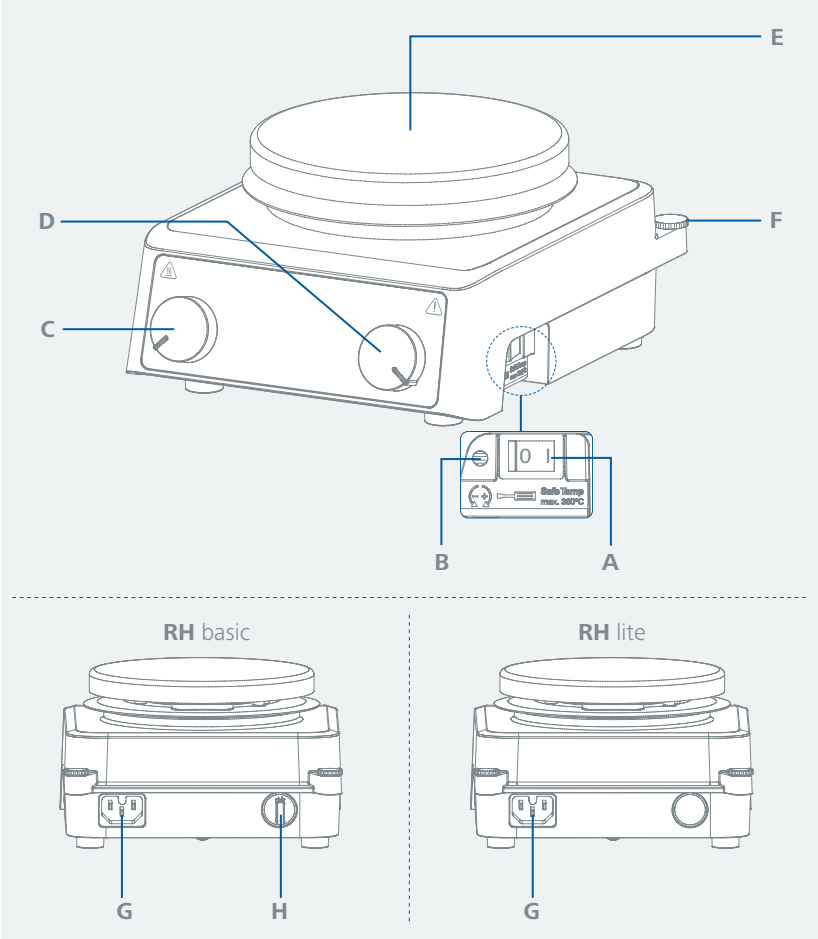

A	Power switch (left "O" « off, right "I" « on)
B	Adjustable safety circuit
C	Rotating / pressing knob - Temperature setting
D	Rotating / pressing knob - Speed setting
E	Heating plate

F	Threaded hole for stand
G	Power socket
H	Connection for temperature probes or contact plugs (only for **RH** basic)

/// Display

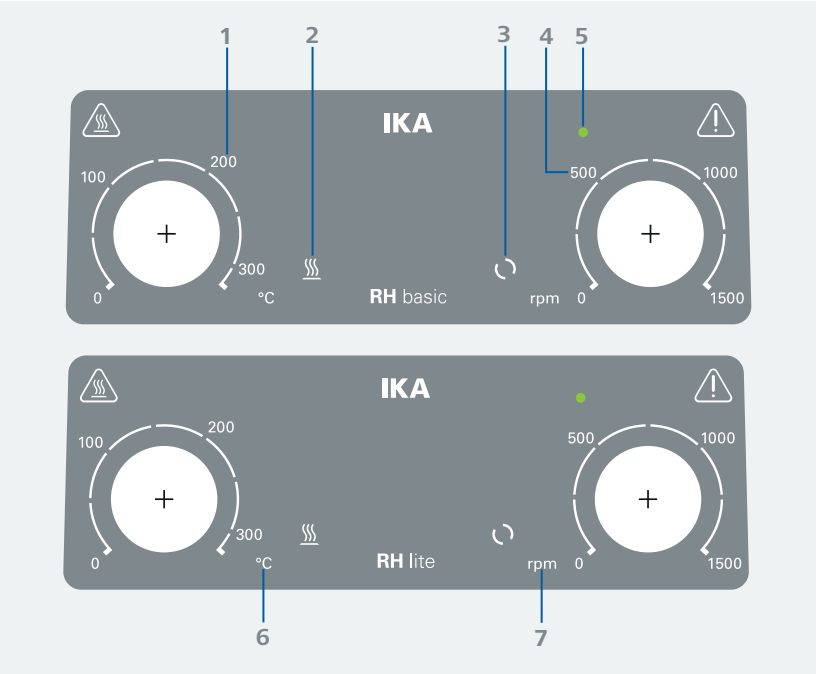

1	Temperature value
2	Heating LED
3	Stirring LED
4	Speed value
5	Status LED
6	Temperature unit
7	Speed unit

Installation

/// Assembling H 16 V / H 38 / H 44 / H 16.3 (accessories)

› Review the mounting and safety instructions of the IKA boss head clamp prior to using it.
› The device must not be suspended from the support rod!

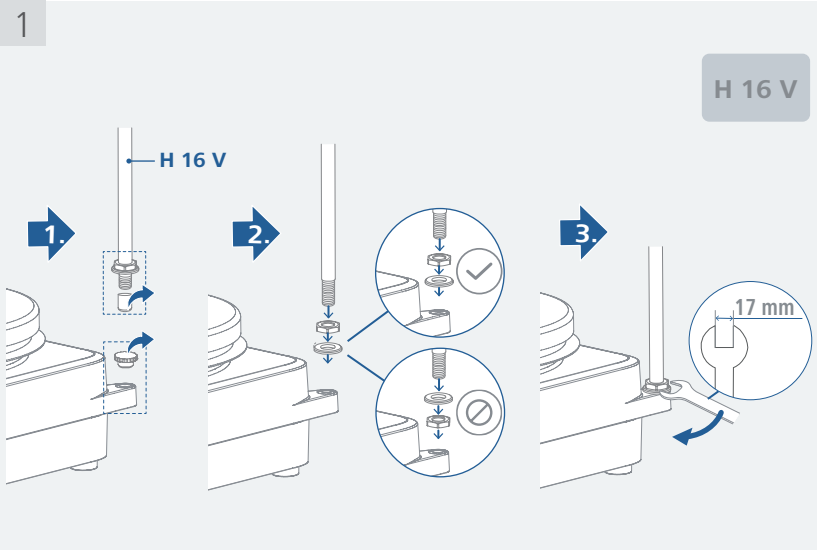

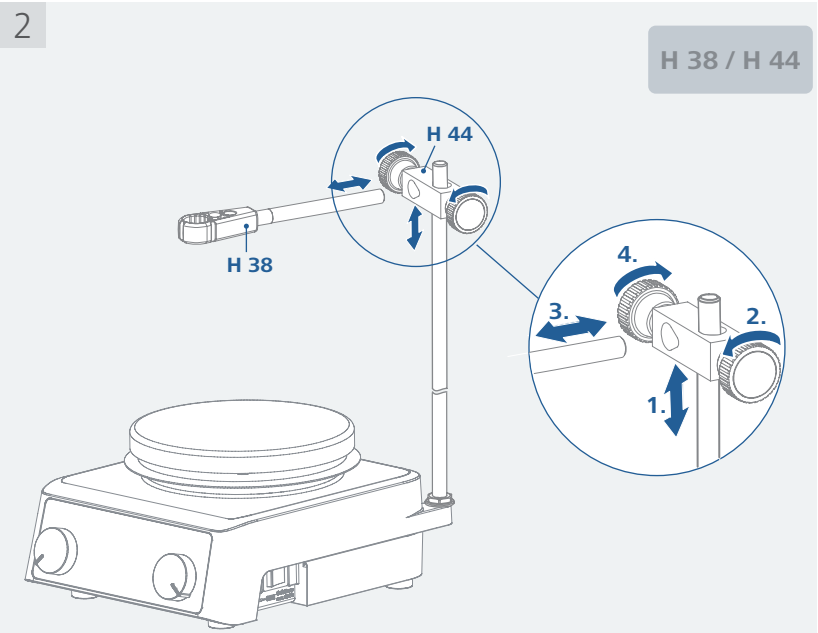

Risk of tipping!
› Make sure that the center of mass of the attached device does not protrude over the safe area indicated below with a dotted rectangle.

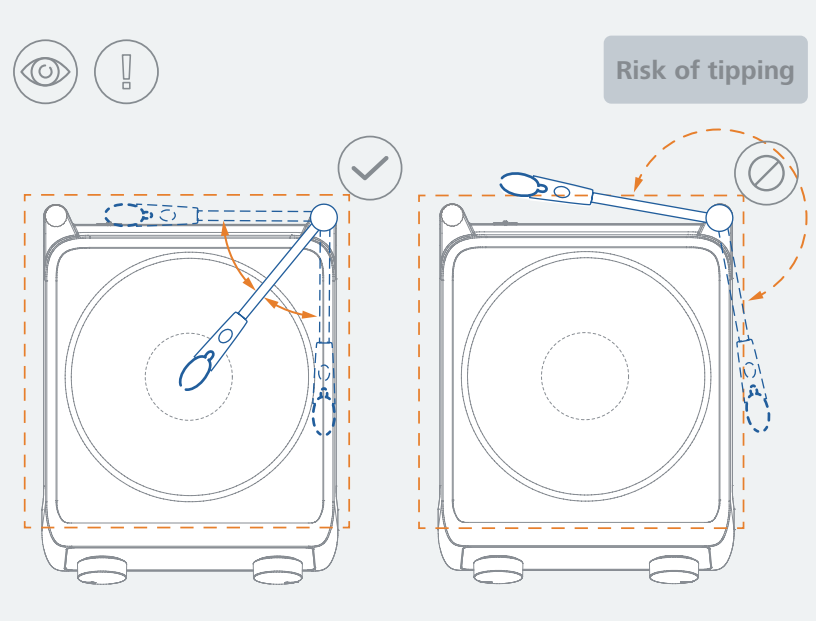

Notice!
› When using bath attachments with a diameter over 180 mm, use support rod in conjunction with an extension.

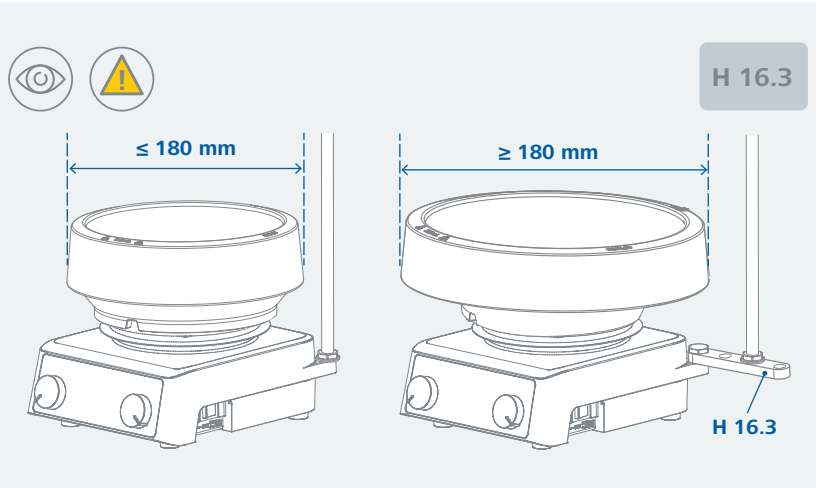

/// Connecting ETS-D5 (only for **RH** basic)

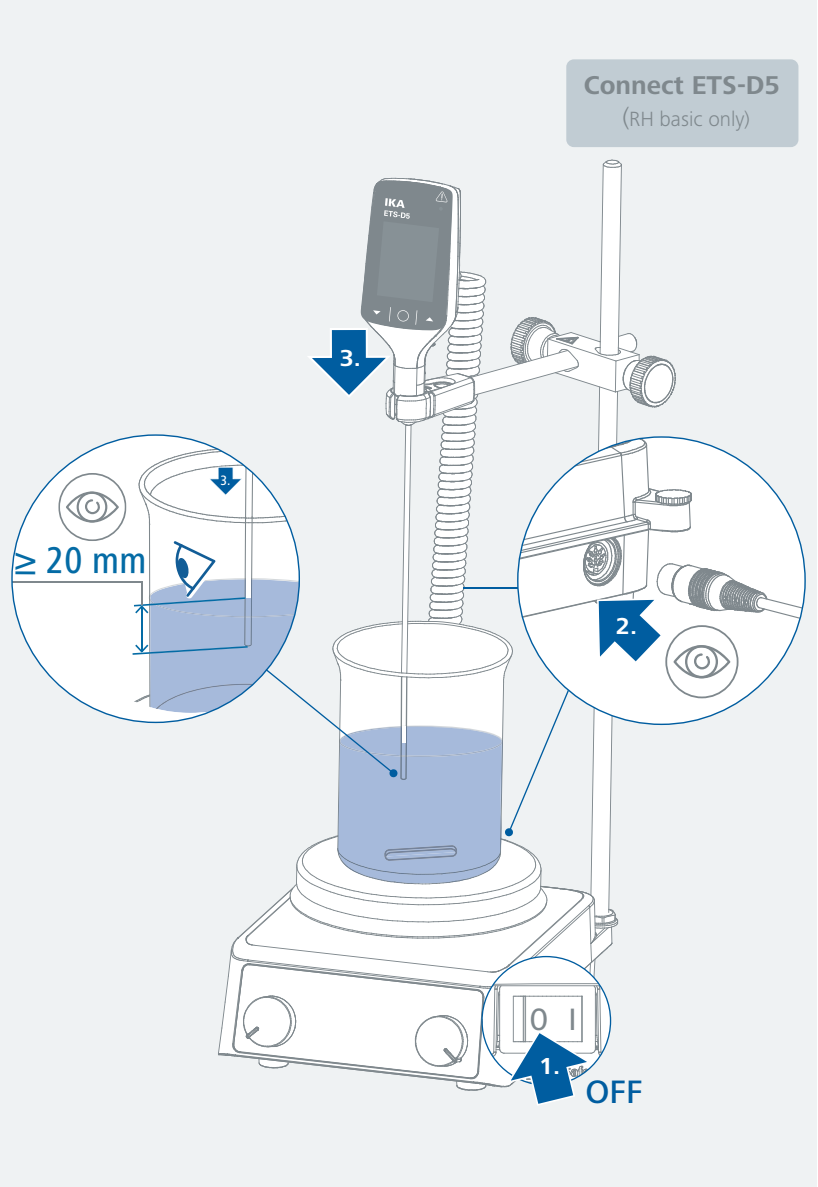

Operation

/// Switching on

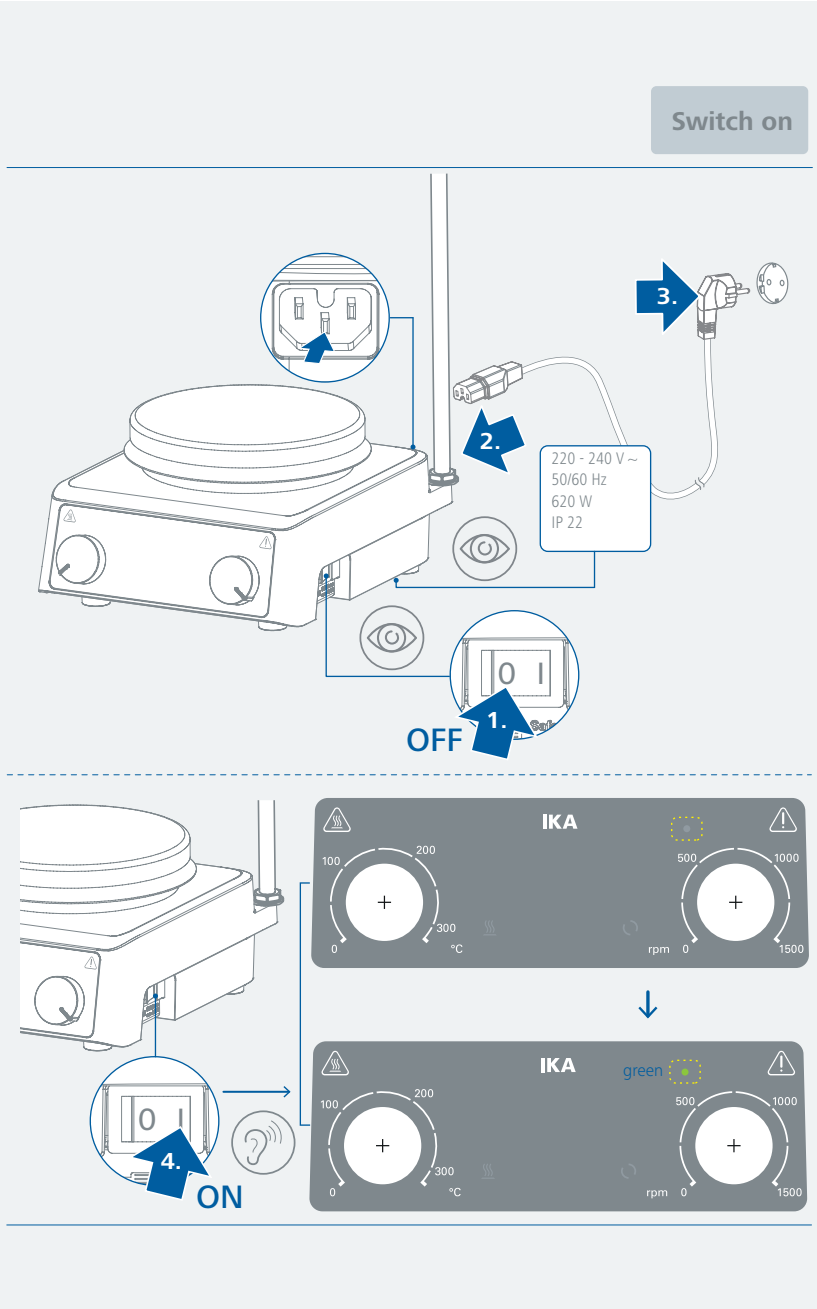

/// Heating

Setting the safety temperature limit:
The maximum achievable heating plate temperature is restricted by an adjustable safety temperature limit. Once this limit has been reached, the device stops heating.

Notice!
The denominated temperatures should always refer to the center of the heating plate.

Warning!
The safety temperature limit must always be set at least 25 °C lower than the fire point of the media to be processed!
The adjustable maximum heating plate temperature must always be set at least 15 °C under the set safety temperature limit.
Setting range: see section "Technical data".
Factory setting: 360 °C

After switching on the device, the safety temperature limit can be adjusted using a screwdriver. Do not turn the setting screw beyond the clockwise or anticlockwise stop. This will cause irreparable damage to the potentiometer.

- Using the screwdriver supplied, turn the setting screw (adjustable safety circuit) clockwise to the stop position (maximum safety temperature).
- Set the target temperature to the desired safety temperature limit using the rotating / pressing knob (C) and start the heating function. Wait until this temperature has been reached. The heating LED lights up steadily.
- Turn the setting screw anti-clockwise slowly until the heating function switches off automatically. The status LED changes color from green to red and a beep indicates the error.
- Then, turn the setting screw slightly clockwise.
- Switch the device off and on again using the power switch. This will complete the setting of the safety temperature limit and the device is ready for use.

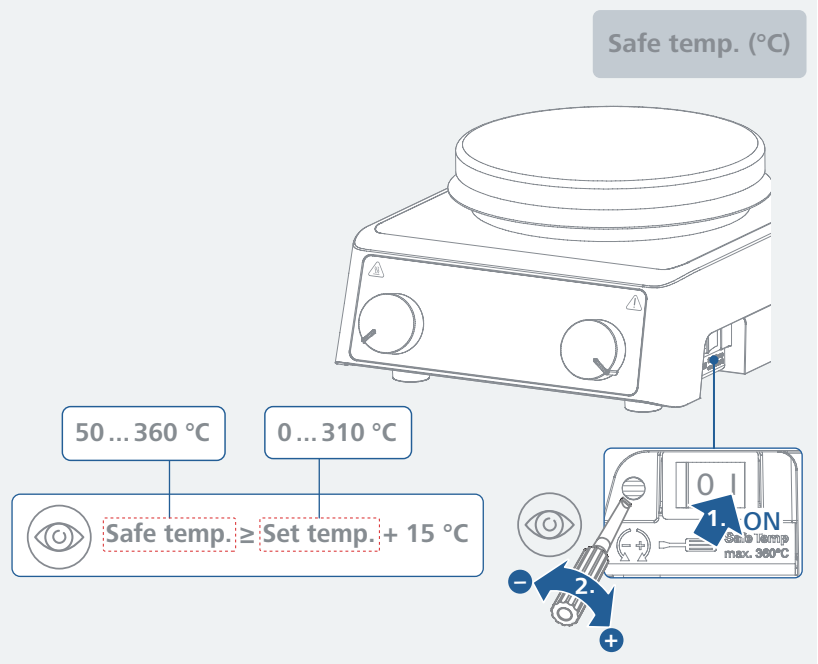

Start heating:

- Set the safety temperature limit. (see "Setting the safety temperature limit")
- Set the target temperature using the rotating / pressing knob (C).
- Press the rotating / pressing knob (C) to start the heating function.
  The heating LED will blink white during heating, and then stay in steady white once the target temperature has been reached.

Warning!

- The status LED turns yellow if the set temperature is higher than the safety temperature during heating.

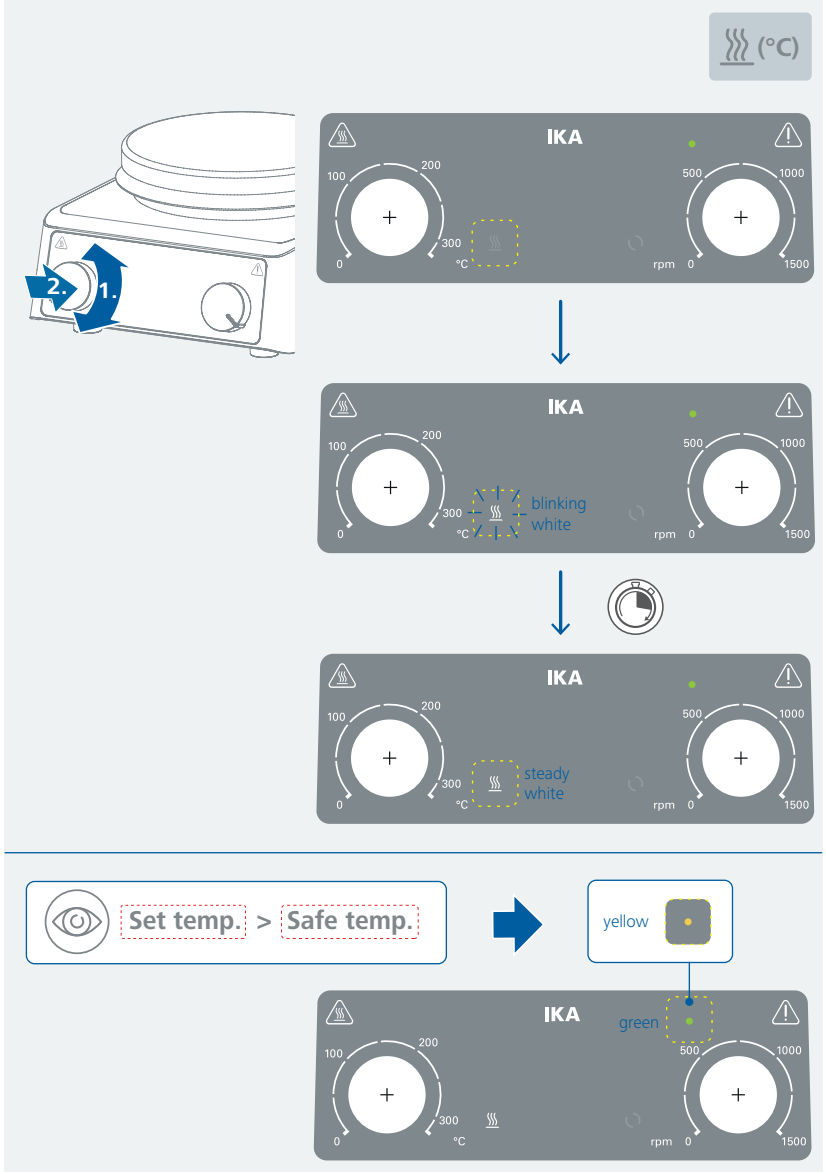

General information for heating:

› When the device is switched off while the temperature of the heating plate is higher than 50 °C, the red heating LED will blink if the device is powered.

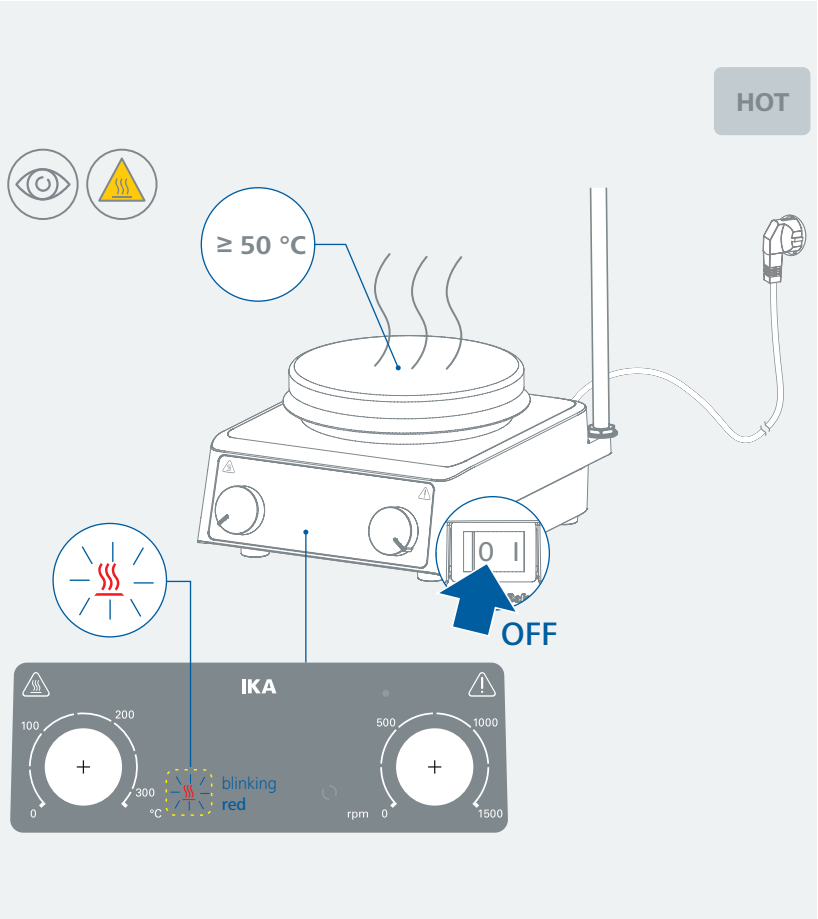

/// Controlling the medium temperature limit using a contact thermometer (only for **RH** basic)

A 6-pin connector is located on the rear side of the device for connecting the contact thermometer or the contact plug.

Safety function:

If the test current is interrupted because of e.g. breakage of contact thermometer or falling out of the cable plug, the heating cuts off.

Settings:

For detailed instructions for settings and limit values, please refer to the operating instructions of the device you are connecting.

The desired medium temperature can be adjusted on the contact thermometer. The required surface temperature of the heating plate can be selected with the rotating / pressing knob or button.

Adjusting the temperature of device to the maximum adjustable temperature will result in the fastest possible heating time. However, the medium temperature may fluctuate to values above the set temperature on the contact thermometer. By adjusting the rotating / pressing knob or button to approximately twice the set-point value of contact thermometer (with a set-point of 60 °C, the temperature of device would be set to 120 °C), you will reach a good compromise between a fast heating time and over-shooting the set point. If you adjust the temperature of the device to exactly the set temperature, the medium will not reach the set temperature because some loss of the heat will always occur between the heating plate and the medium.

The maximum heating plate temperature is limited to the adjusted safety temperature limit in the event of a control circuit malfunction. (See "Setting the safety temperature limit")

/// Stirring

› Set the speed using the rotating / pressing knob (D).
› Press the rotating / pressing knob (D) to start the stirring function.
The stirring LED will be in stable white during stirring.

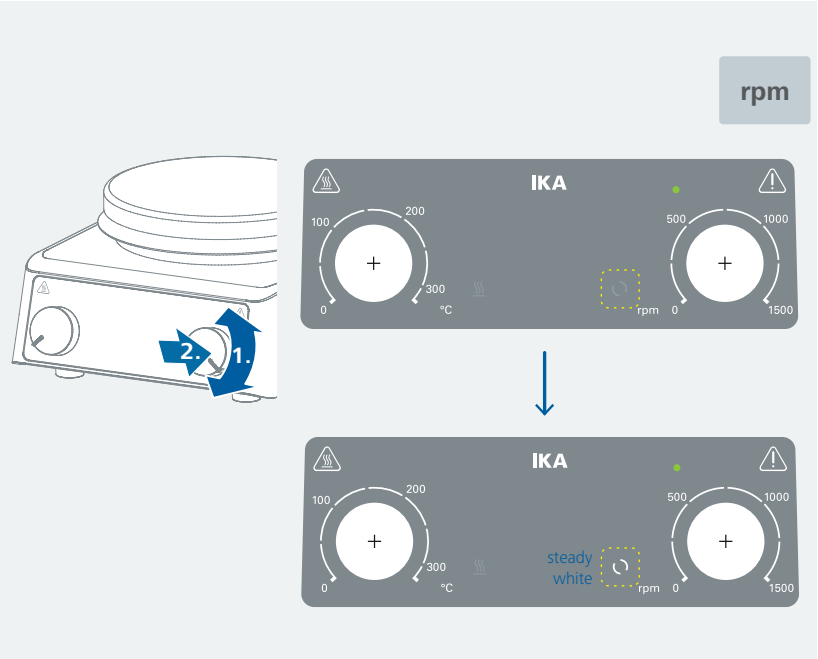

/// Error

› If an error occurs, the status LED will turn red and remain lit, and the device will continue to beep. The heating function will stop, while the stirring function will continue to run for the safety consideration of the medium.
Proceed as follows in such cases:
- Switch off the device and allow it to cool down.
- Switch on the device for self-checking.

› If the actions described fail to resolve the fault, then:
- contact the service department.
- send the device for repair, including a short description of the fault.

Maintenance and cleaning

› The device is maintenance-free. It is only subject to the natural wear and tear of components and their statistical failure rate.

/// Cleaning

› For cleaning disconnect the mains plug!
› Use only cleaning agents which have been approved by IKA to clean the devices:
Water containing surfactant / isopropyl alcohol.
› Wear protective gloves during cleaning the devices.
› Electrical devices may not be placed in the cleansing agent for the purpose of cleaning.
› Do not allow moisture to get into the device when cleaning.
› Before using another than the recommended method for cleaning or decontamination, the user must ascertain with IKA that this method does not destroy the device.

/// Ordering spare parts

› When ordering spare parts, please give:
- device type.
- serial number, see type plate.
- position number and description of spare part, see **www.ika.com**.
- software version.

/// Repairs

› Please only send in devices for repair that have been cleaned and are free of materials which might present health hazards.
› For repair, please request the "**Safety Declaration (Decontamination Certificate)**" from IKA or use the downloaded printout of it from IKA website at **www.ika.com**.
› If your appliance requires repair, return it in its original packaging. Storage packaging is not sufficient when sending the device - also use appropriate transport packaging.

Accessories

› For accessories see **www.ika.com**.

Technical data

	RH basic	**RH** lite
General data		
Voltage	220 ... 230 VAC ± 10% 115 VAC ± 10% 100 VAC ± 10%	
Frequency	50 / 60 Hz	
Power input	620 W	
Self-heating of the heating plate by max. stirring (RT: 22 °C / duration: 1 h)	+6 K	
Permissible ambient temperature	+ 5 ... + 40 °C	
Permissible relative humidity	80 %	
Protection class according to DIN EN 60529	IP 22	
Protection class	I	
Contamination level	2	
Overvoltage category	II	
Plate material	Aluminium	
Plate dimensions	Ø 135 mm	
Dimensions (W × D × H)	168 × 217 × 100 mm	
Weight	2.1 kg	
Operation at a terrestrial altitude	max. 2000 m	
Stirring function		
Number of stirring positions	1	
Max. stirring quantity (H_2O)	15 l	
Maximum load	20 kg	
Motor type	EC	
Motor output	7 W	
Speed range	0 / 100 ... 1500 rpm	
Speed display set-value	Scale	
Speed display actual-value	Scale	
Speed setting	rotating / pressing knob	
Direction of rotation	right	
Speed deviation (no load, nominal voltage, at 1500 rpm, ambient temperature +25 °C)	± 5 %	
Stirring bar length	20 ... 80 mm	

	RH basic	**RH** lite
Heating function		
Heat output	600 W	
Heating temperature range	RT + device self-heating ... 310 °C	
Temperature setting range	0 ... 310 °C	
Temperature display set-value	Scale	
Temperature display actual-value	Scale	
Temperature setting	rotating / pressing knob	
Temperature unit	°C	
Heating rate (1 l water in H 1500)	5.5 K/min	
Temperature control accuracy of heating plate (without vessel, heating plate centre at 100 °C)	± 5 K	
Temperature control accuracy of heating plate (without vessel, heating plate centre at 300 °C)	± 15 K	
Adjustable safety circuit	(50 °C ... 360 °C) ± 10 °C	
Contact thermometer (only for **RH** basic)		
Connection for contact thermometer	ETS-D5	-
Temperature control accuracy (500 ml water in 600 ml glass beaker, 40 mm bar, 600 rpm, 50 °C)	± 0.5 K (with ETS-D5)	-

Subject to technical changes!

Warranty

› In accordance with IKA Terms and Conditions of Sale, the warranty period is 24 months. For claims under the warranty please contact your local dealer. You may also send the device direct to our factory, enclosing the delivery invoice and giving reasons for the claim. You will be liable for freight costs.

› The warranty does not cover worn out parts, nor does it apply to faults resulting from improper use, insufficient care or maintenance not carried out in accordance with the instructions in this operating instructions.

IKA

designed for scientists

IKA-Werke GmbH & Co. KG
Janke & Kunkel-Straße 10,
79219 Staufen, Germany
Phone: +49 7633 831-0
eMail: sales@ika.de

USA
IKA Works, Inc.
Phone: +1 910 452-7059
eMail: sales@ika.net

KOREA
IKA Korea Ltd.
Phone: +82 2 2136 6800
eMail: sales-lab@ika.kr

BRAZIL
IKA Brasil
Phone: +55 19 3772 9600
eMail: sales@ika.net.br

MALAYSIA
IKA Works (Asia) Sdn Bhd
Phone: +60 3 6099-5666
eMail: sales.lab@ika.my

CHINA
IKA Works Guangzhou
Phone: +86 20 8222 6771
eMail: info@ika.cn

POLAND
IKA Poland Sp. z o.o.
Phone: +48 22 201 99 79
eMail: sales.poland@ika.com

JAPAN
IKA Japan K.K.
Phone: +81 6 6730 6781
eMail: info_japan@ika.ne.jp

INDIA
IKA India Private Limited
Phone: +91 80 26253 900
eMail: info@ika.in

UNITED KINGDOM
IKA England LTD.
Phone: +44 1865 986 162
eMail: sales.england@ika.com

VIETNAM
IKA Vietnam Company Limited
Phone: +84 28 38202142
eMail: sales.lab-vietnam@ika.com

THAILAND
IKA Works (Thailand) Co. Ltd.
Phone: +66 2059 4693
eMail: sales-lab.thailand@ika.com

TURKEY
IKA Turkey A.Ş.
Phone: +90 216 394 43 43
eMail: sales.turkey@ika.com

KENYA
IKA Works Kenya Ltd.
Phone: +254 112 323 745
eMail: sales.kenya@ika.com

UGANDA
IKA Works Kampala Limited
Phone: +254 112 323 745
eMail: sales.uganda@ika.com

SPAIN
IKA Works Spain, S. L.
Barcelona
eMail: sales.spain@ika.com

Register now: **www.ika.com/register**

www.ika.com

IKAworldwide // #lookattheblue

Technical specifications may be changed without prior notice.

20000054363a_EN_RH basic_lite_032026_web