IKA

designed for scientists

ROTATEMP

ENGLISH

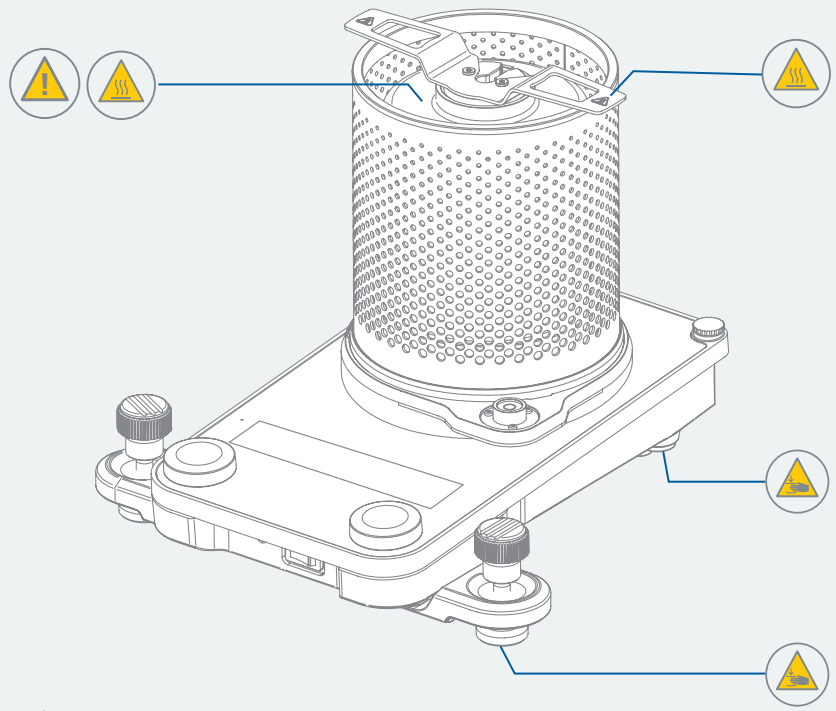

Fig. 1

EU Declaration of conformity 6

Explication of warning symbols 6

Safety instructions 7

Intended use 9

Unpacking 10

Operator panel and display 11

Installation 13

Operation 16

Interfaces and outputs 24

Maintenance and cleaning 27

Accessories 27

Error codes 28

Technical Data 30

Warranty 31

Appendix A “Viscosity ranges / Spindle factors” 32

Appendix B “Range coefficient“ 32

Appendix C “ASTM Specifications“ 33

Source language: German

EU Declaration of conformity

We declare under our sole responsibility that this product corresponds to the directives 2014/35/EU, 2006/42/EC, 2014/30/EU and 2011/65/EU and conforms with the following standards or normative documents: EN 61010-1, EN 61010-2-010, EN 61326-1, EN 60529 and EN ISO 12100.

A copy of the complete Declaration of Conformity or further declarations of conformity can be requested at **sales@ika.com**.

Explication of warning symbols

/// Warning symbols

Danger! Indicates an (extremely) hazardous situation, which, if not avoided, will result in death, serious injury.

Warning! Indicates a hazardous situation, which, if not avoided, can result in death, serious injury.

Caution! Indicates a potentially hazardous situation, which, if not avoided, can result in injury.

Notice! Indicates practices which, if not avoided, can result in equipment damage.

Danger! Indicates the exposure to a hot surface.

Caution! Indicates crushing risk to fingers / hands.

/// General Symbols

A— Position number
Indicates device components relevant to actions.

Correct / result
Indicates the correct execution or the result of an action step.

Wrong
Indicates the incorrect execution of an action step.

Note
Indicates steps of actions that require particular attention.

Safety instructions

/// General information

- **Read the operating instructions completely before starting up and follow the safety instructions. If this device is used with another device, observe also its operating instructions.**
- Keep the operating instructions in a place where it can be accessed by everyone.
- Ensure that only trained staff work with the device.
- Follow the safety instructions, guidelines, occupational health and safety and accident prevention regulations.
- The device must only be used in a technically perfect condition.

Notice!
- Pay attention to the marked sites in **Fig. 1**.

/// Device design

Caution!
- Device surface is partially made of glass:
  - Glass surface can be damaged by impact.
  - If glass surface is damaged it could cause injury, don`t use the device anymore.

Caution!
- Ensure that your hands / fingers do not get crushed when setting down the device.

Notice!
- Set up the device in a spacious area on an even, stable, clean, non-slip, dry and fireproof surface.
- The feet of the device must be clean and undamaged.

/// Working with the device

Danger!
- Do not use the device in explosive atmospheres, it is not EX-protected.
- With substances capable of forming an explosive mixture, appropriate safety measures must be applied, e.g. working under a fume hood.
- To avoid body injury and property damage, observe the relevant safety and accident prevention measures when processing hazardous materials.

Danger!
- Exercise caution when touching parts of the housing and the heating system.
- The heating system can reach dangerous temperatures. Pay attention to the residual heat on the heating system after switching off the device.
- The device may only be transported when the heating system has cooled down.

Warning!
- Only process media that will not react dangerously to the extra energy produced through processing. This also applies to any extra energy produced in other ways, e.g. through light irradiation.
- Process pathogenic materials only in closed vessels under a suitable fume hood.
- Please consider any possible contaminations and unwanted chemical reactions.

› The safety temperature must be set in accordance with EN 61010-2-010 Chapter "Requirements for devices containing or using flammable liquids".
  - The surface temperature of the flammable medium that is exposed to air may not exceed its flash point.
    A danger usually arises if a medium is heated in open vessels.
  - The surface temperature of the heating device may not exceed the value of (***t*** - 25) °C (= set value of the safety circuit) on the surface of the flammable medium and in contact with air, whereby ***t*** is the fire point of the liquid.
    A danger usually arises if a medium is heated in glass vessels (glass breakage).

  If a setting made by the user (medium temperature or safety temperature) could bring a flammable medium into a state in which the conditions mentioned above could be exceeded, additional measures must be introduced that will protect the user from this danger.

Notice!

› Ensure that the power cord set / temperature sensor cable does not touch the heating system.
› Do not cover the device, even partially e.g. with metallic plates or film. This may result in overheating.

/// Accessories

› Protect the device and accessories from bumps and impacts.
› Check the device and accessories for damage before each use. Do not use damaged components.
› Safe operation is guaranteed only with the use of original IKA accessories.
› Always disconnect the plug before attaching accessories.
› Observe the operating instructions of the accessories.

/// Power supply / Switching off the device

› The voltage stated on the type plate must correspond to the power voltage.
› The device can only be disconnected from the power supply by pulling out the power plug or the connector plug.
› The socket for the power cord must be easily accessible.
› Socket must be earthed (protective ground contact).
› If a power failure occurs during operation, the device cannot start automatically.

/// Maintenance

› The device must only be opened by trained specialists, even during repair. The device must be unplugged from the power supply before opening. Live parts inside the device may still be live for some time after unplugging from the power supply.

/// Disposal instructions

› The device, accessories and packaging must be disposed of in accordance with local and national regulations.

Intended use

/// Use

› The IKA ROTATEMP is designed for heating solid or liquid substances to a specific temperature and precisely controlling the temperature. In combination with the IKA ROTAVISC, the viscosity of the heated sample substances can be determined.

Notice!

› For the testing samples that are solid or semisolid at the ambient temperature, the amount of the testing samples which in the liquid state should be equivalent to the testing volume required. Please pay attention to the density of the sample material.

/// Area of use

› Indoor environments similar to that a laboratory of research, teaching, trade or industry area.
› The safety of the user cannot be guaranteed:
  - if the device is operated with accessories that are not supplied or recommended by the manufacturer,
  - if the device is operated improperly or contrary to the manufacture's specifications,
  - if the device or the printed circuit board are modified by third parties.

Unpacking

/// Unpacking

› Unpack the device carefully. Any damage should immediately be reported to the carrier (mail, rail or freight forwarding company).

/// Scope of delivery

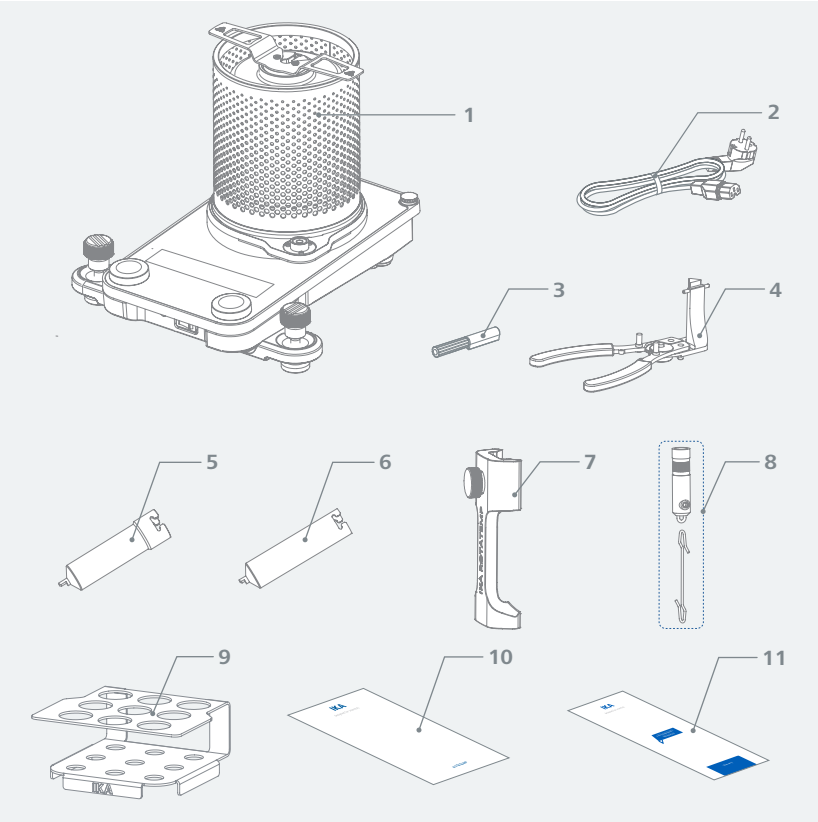

1	ROTATEMP	7	Alignment bracket
2	Power cord set	8	VOLS 1.11
3	Screwdriver (safety circuit)	9	ROTAT Rack
4	ROTAT extraction tool	10	User guide
5	ROTAT-C (Sample chamber)	11	Warranty card
6	ROTAT-D-C (Disposable sample chamber, 5x)		

Operator panel and display

/// Operator panel

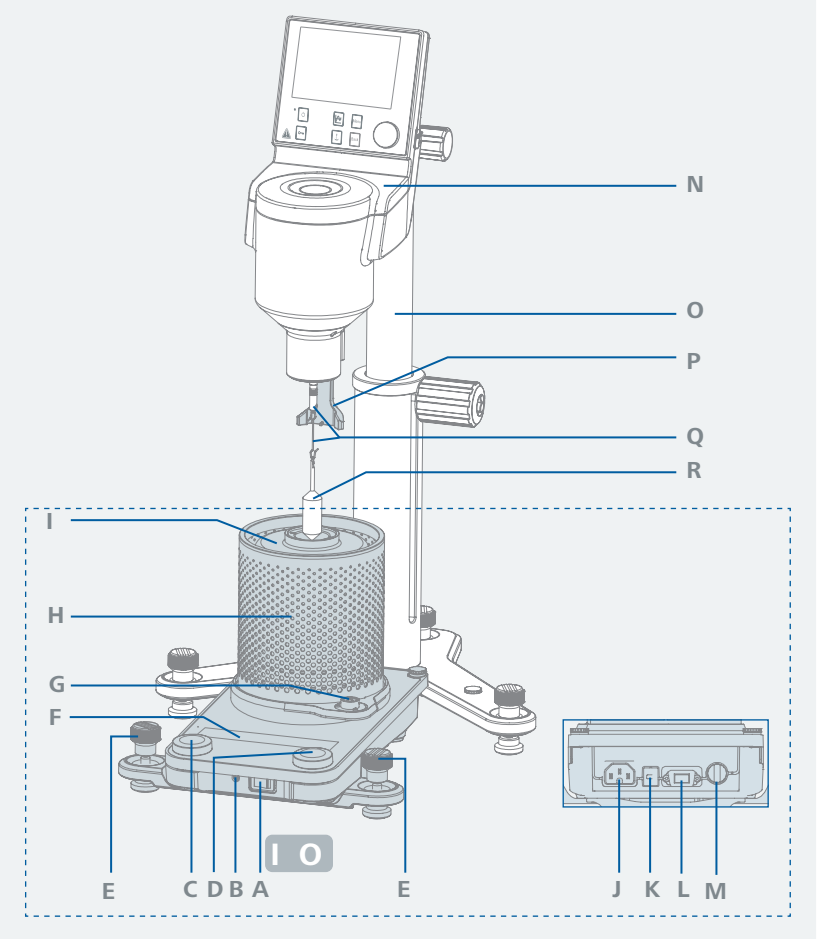

A	Mains switch (left "I" « on, right "O"« off)	J	Power socket
B	Adjustable safety circuit	K	USB Interface
C	Rotating / pressing knob - Temperature / Program setting	L	RS 232 Interface
D	Rotating / pressing knob - Timer setting / Temperature setting (only in mode P)	M	Connection for contact plugs
E	Leveling screw	N	ROTAVISC
F	Display	O	ROTASTAND
G	Bubble level	P	Alignment bracket
H	Protective shield	Q	VOLS 1.11
I	Heating system	R	Spindle

/// Display

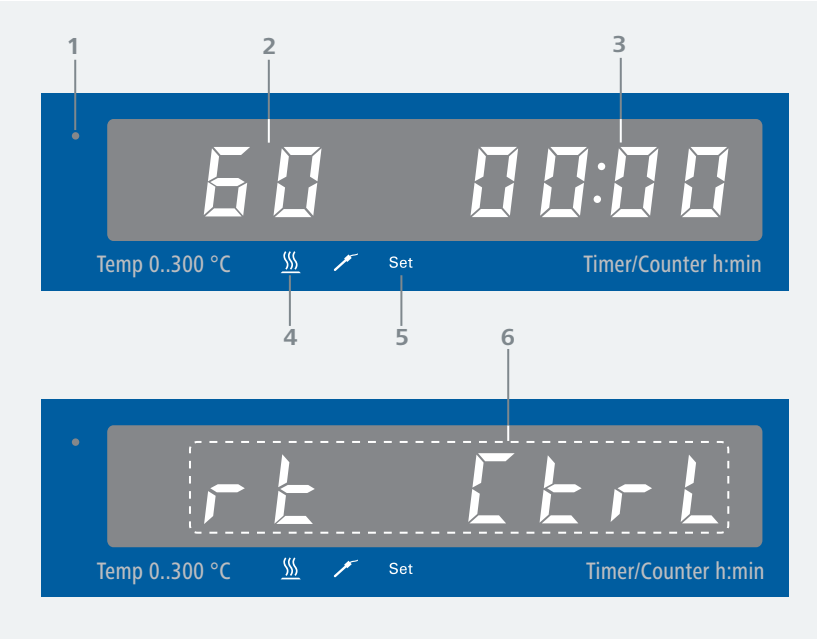

1	Standby LED	4	LED display heating active
2	Temperature / Program display	5	LED display “Set temperature”
3	Timer / Counter	6	PC control / Remote control display

Installation

/// Positioning

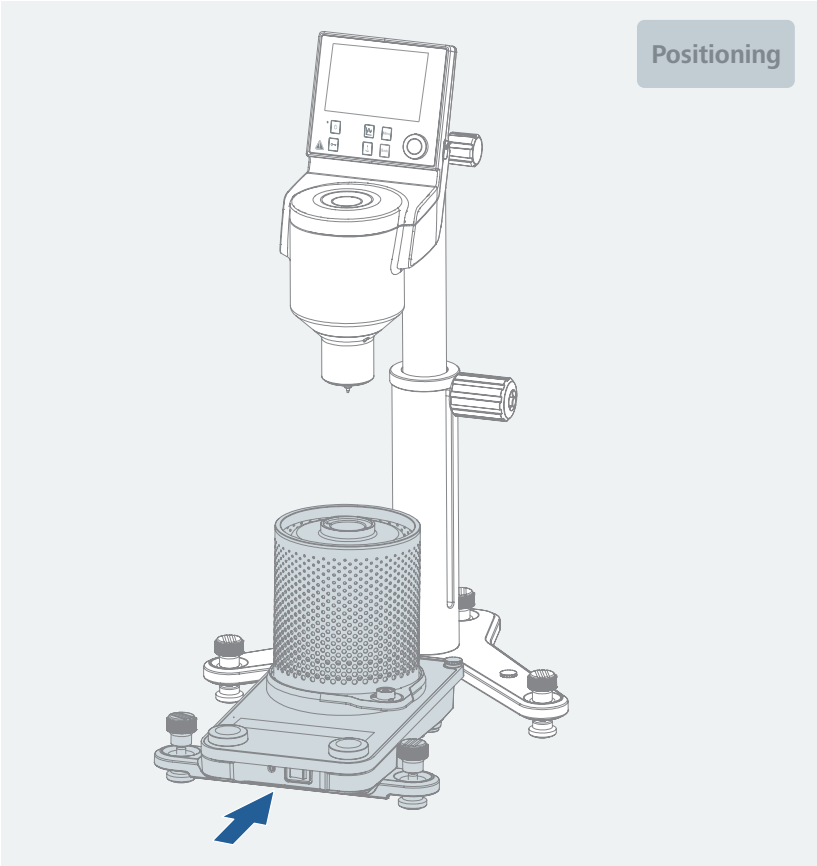

/// Alignment bracket

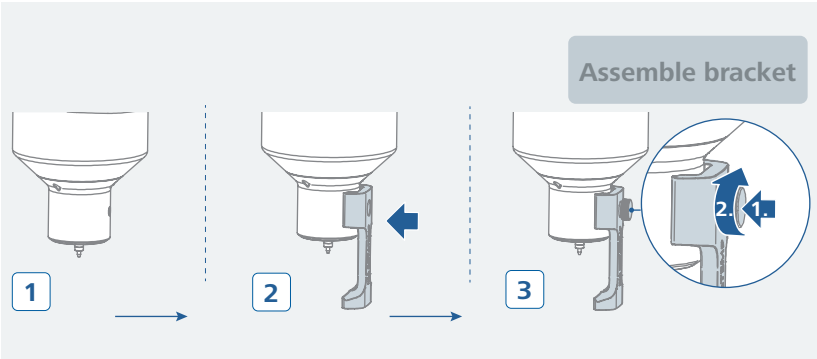

/// Levelling

1

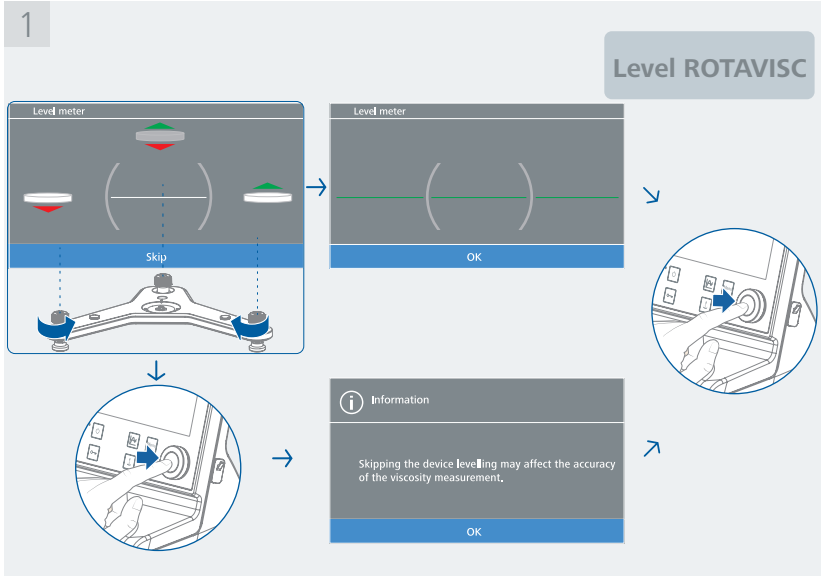

2

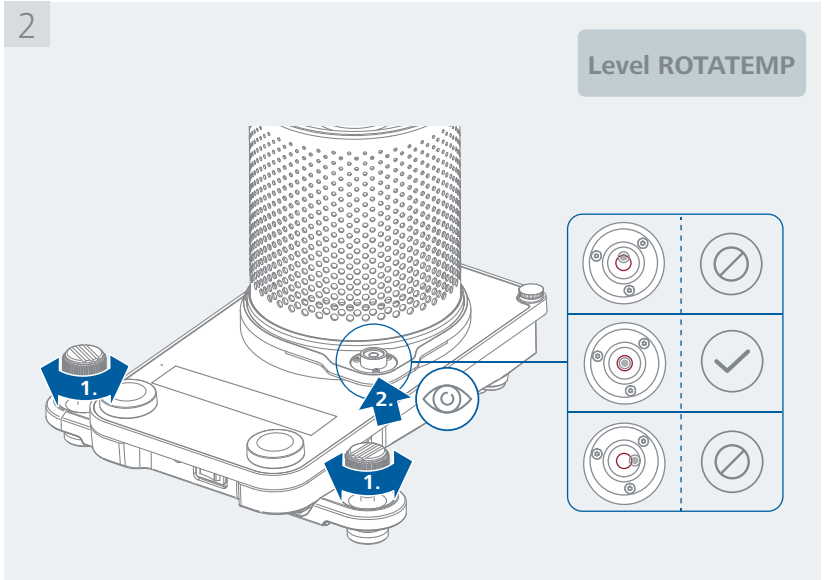

/// ROTAT-C

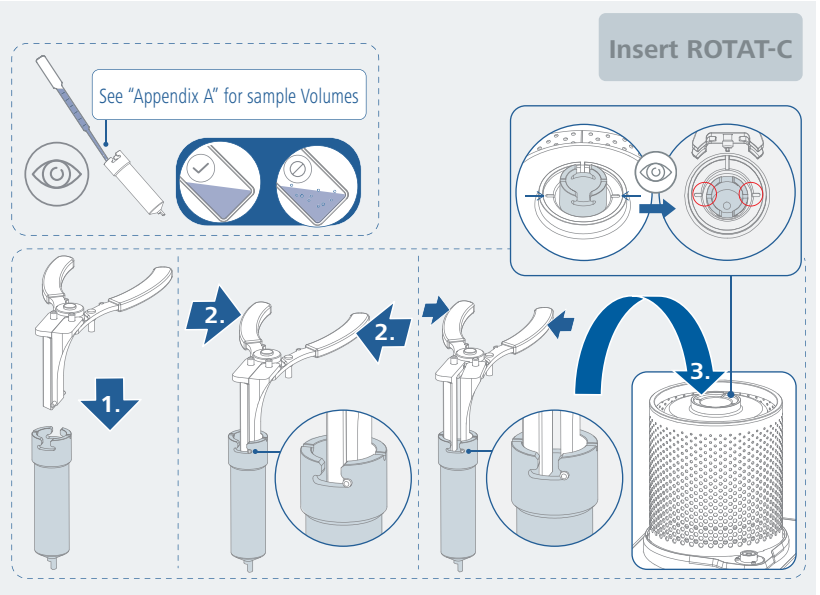

/// Spindle, system alignment, ROTAT-Cover

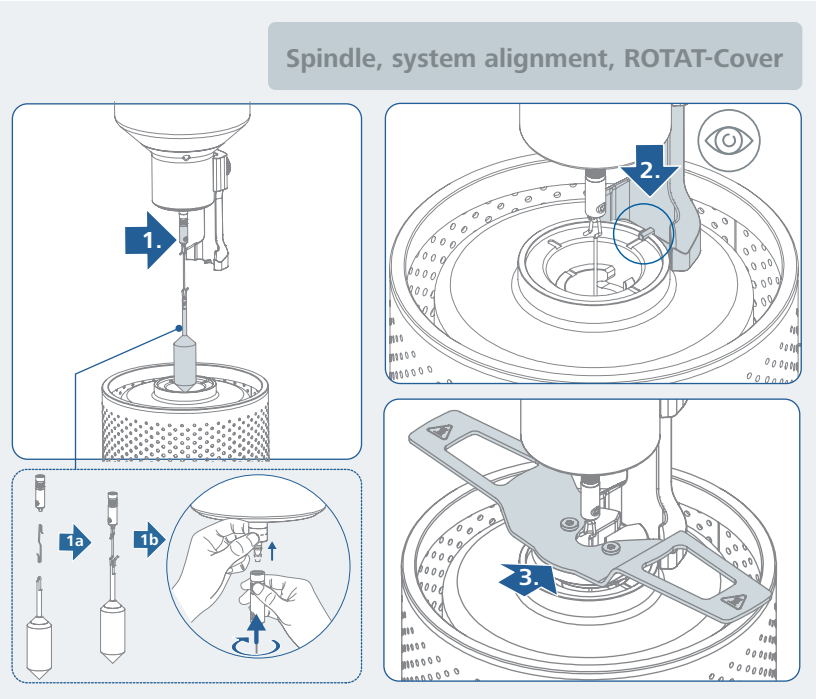

Operation

/// Switching on

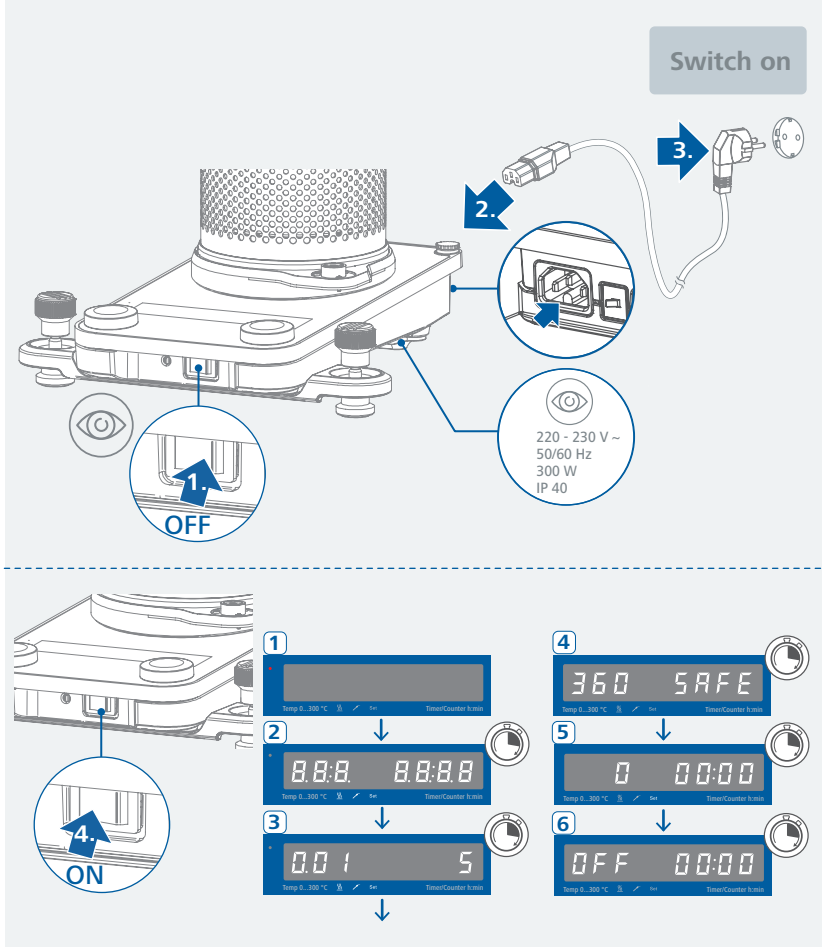

/// Heating

Setting the safety temperature limit:
The maximum achievable heating system temperature is restricted by an adjustable safety temperature limit. Once this limit has been reached, the device stops heating.

Notice!
The denominated temperatures should always refer to the center of the heating system.

Warning!
The safety temperature limit must always be set at least 25 °C lower than the fire point of the media to be processed!
The adjustable maximum heating system temperature must always be set at least 15 °C under the set safety temperature limit.
Setting range: see section "Technical data".

After switching on the device, the safety temperature limit can be adjusted using a screwdriver. Do not turn the setting screw beyond the clockwise or anticlockwise stop. This will cause irreparable damage to the potentiometer.

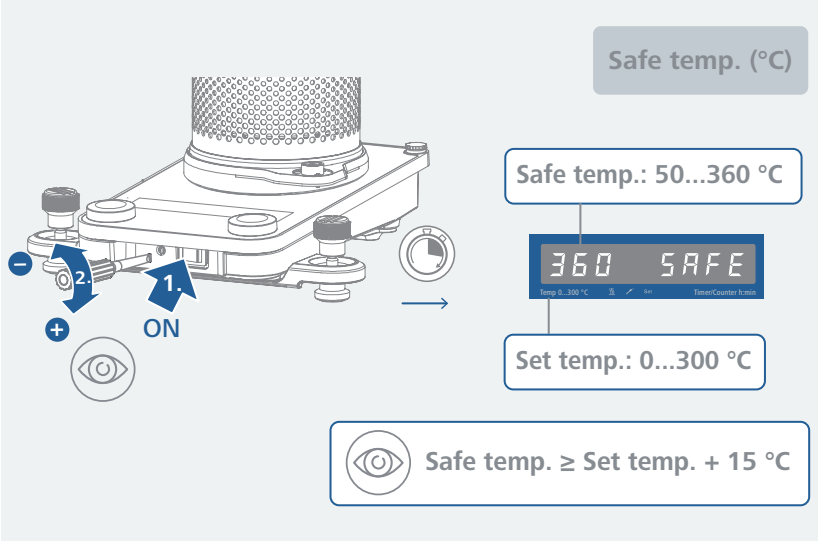

Start heating:

› Set the safety temperature limit. (see “Setting the safety temperature limit”)
› Set the target temperature using the rotating / pressing knob (C).
The set temperature value is shown on the left of the display.
› Press the rotating / pressing knob (C) to start the heating function.

Mode S:

› In this program mode, the setpoint temperature is set individually. The measurement can be started either as a timer or a counter.
› The time in timer mode starts to elapse when the measurement starts regardless of the set-point temperature setting.

Note: At the end of timer operation, all device functions are switched off.

Mode P:

› In this program mode, user-defined “temperature-time” program steps can be created. A program can consist of up to 10 steps.
› The time of a program step begins to elapse as soon as the setpoint temperature is reached.

Note: All device functions are switched off at the end of the program.

General information for heating:

› The set and actual temperature values are shown on the display alternately.
› When the heating function is switched on, the heating LED indicator “♨” lights.
› When the device is switched off while the heating system temperature is higher than 50 °C, the display shows “Hot” and the actual temperature value, even if the device is switched off.

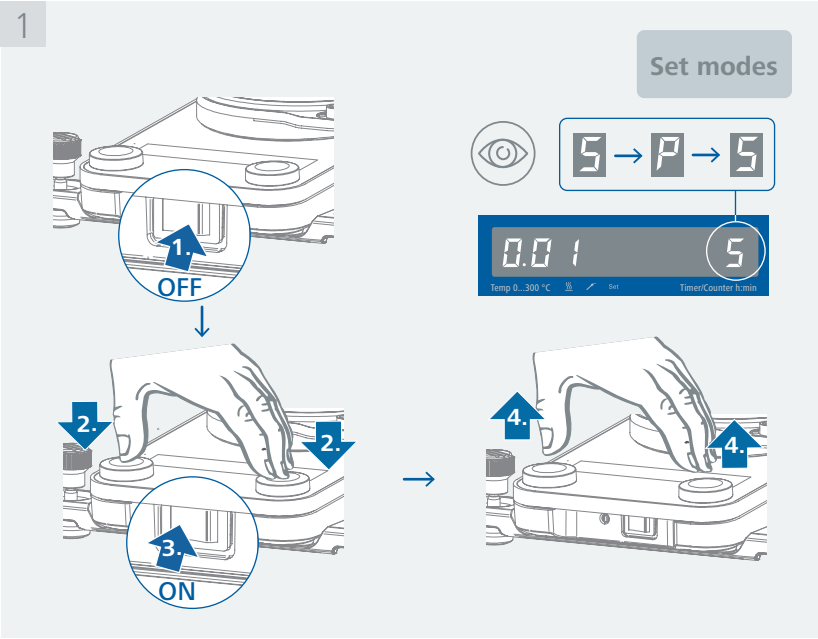

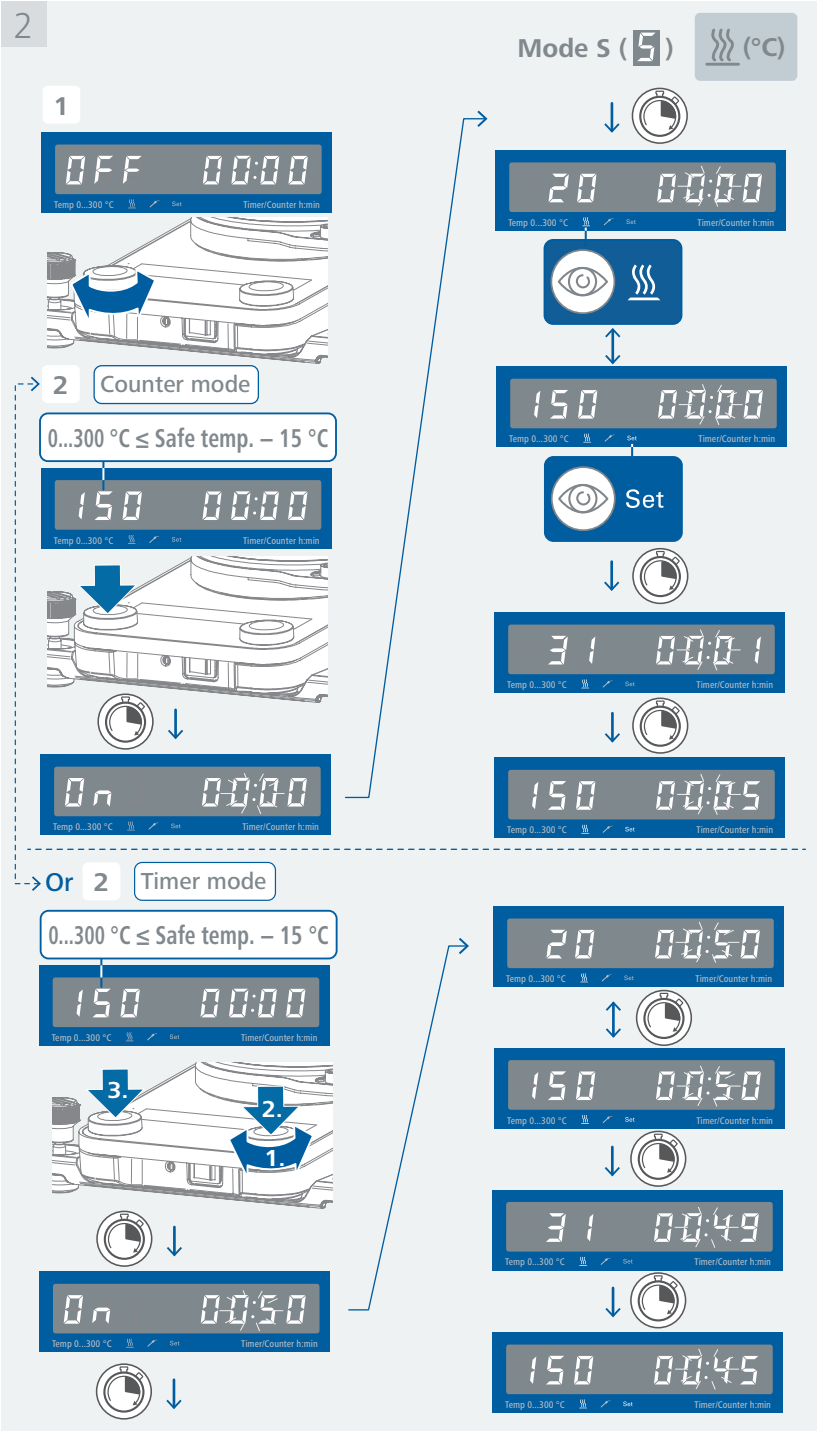

3.1

Mode P (P)

Set programs

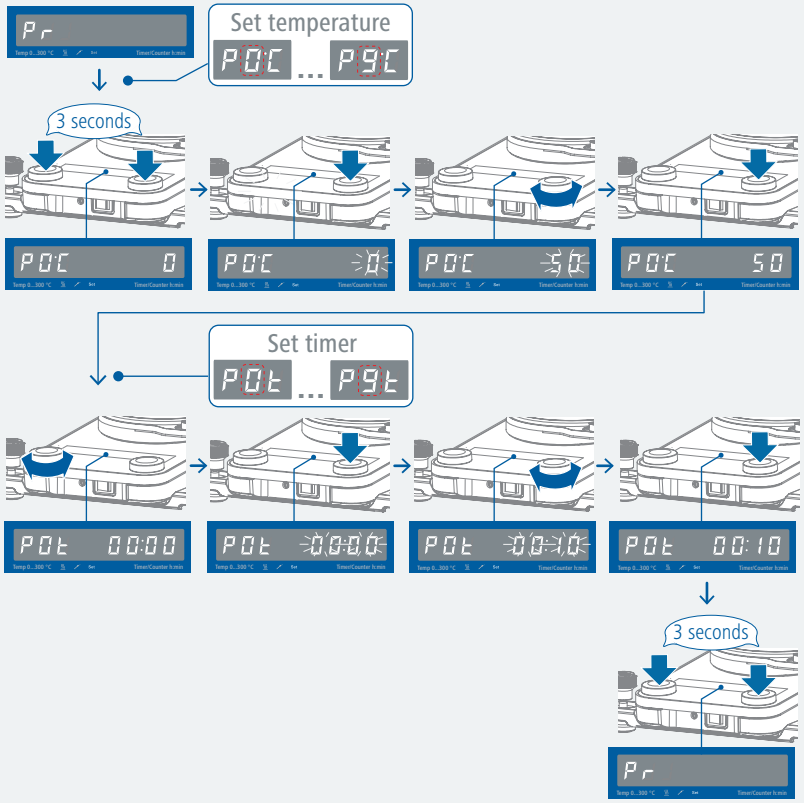

3.2

Mode P (P) (°C)

Run programs

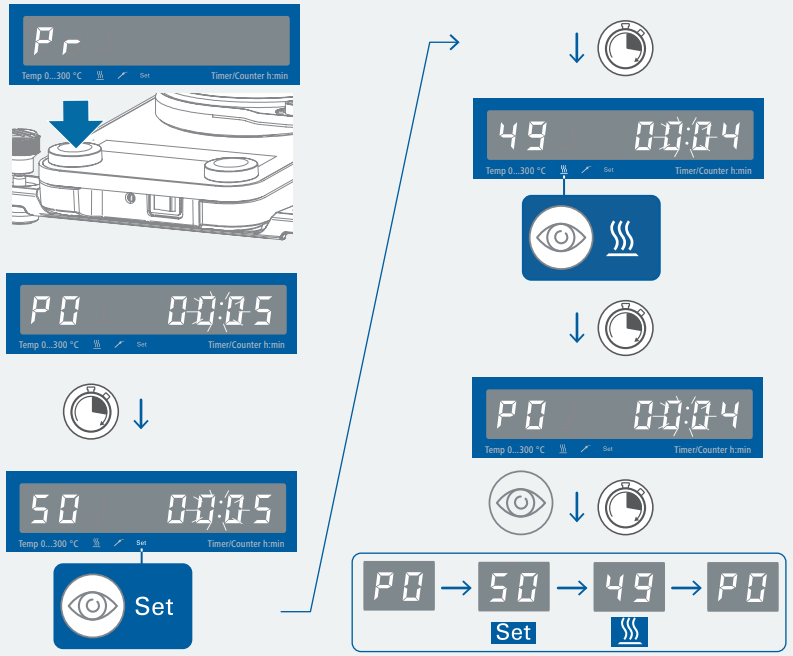

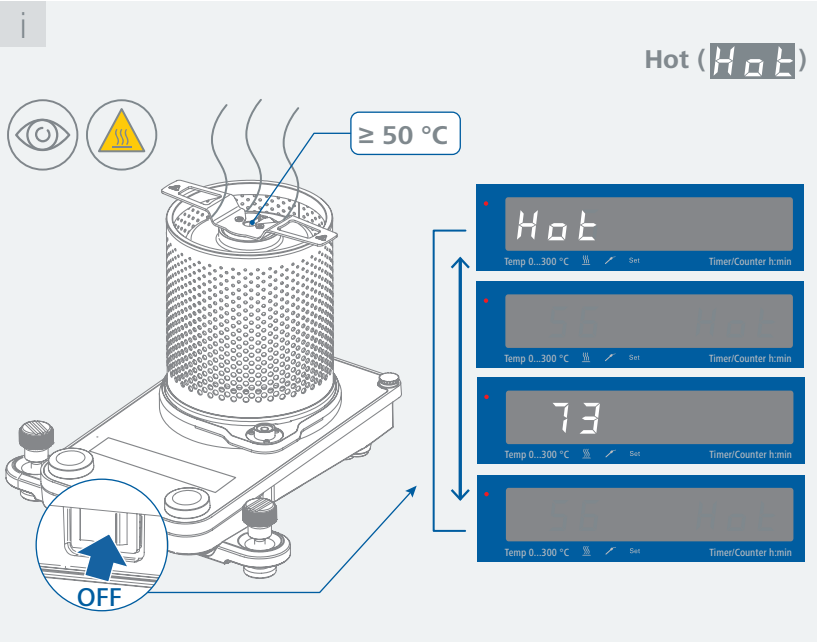

/// Cooling the heating system

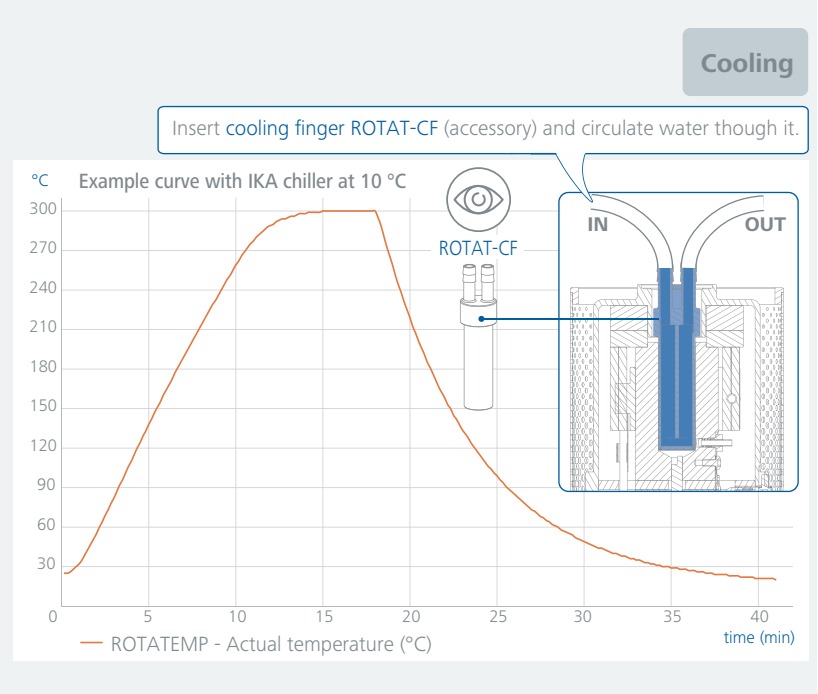

/// Disassembly of protective shield

Note: Only permitted for cleaning purposes!

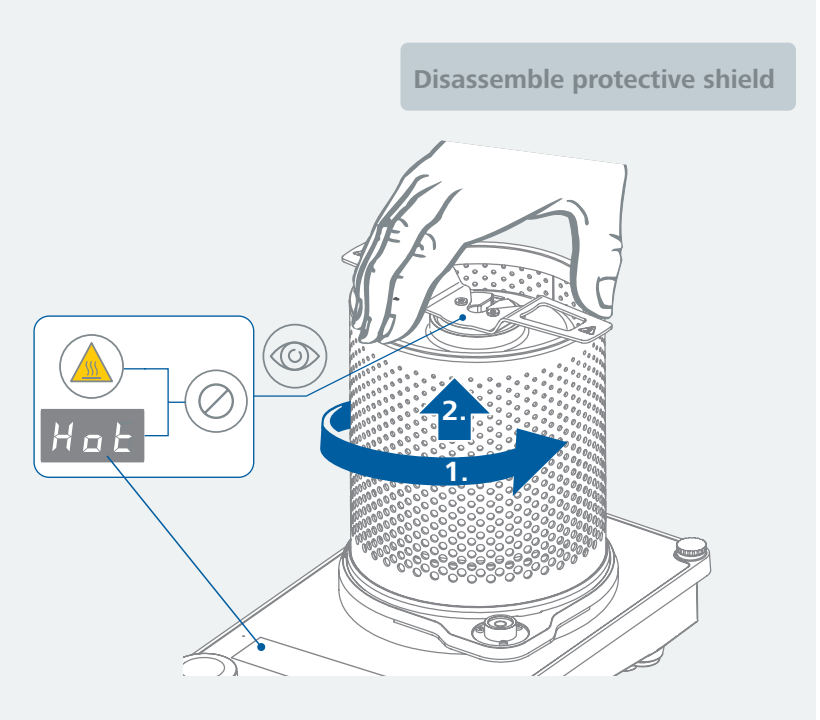

Interfaces and outputs

The device can be operated by computer via an RS 232 or USB interface using the laboratory software labworldsoft®.
The device software can also be updated with a PC via the RS 232 or USB port.

Notice!
Please comply with the system requirements together with the operating instructions and help section included with the software.

/// USB interface:

The connected devices and their properties are detected automatically. The USB interface is used in conjunction with software control for "remote" operation and can also be used for software update of the device.

/// USB device drivers:

First, download the latest driver for IKA devices with USB interface from:
http://www.ika.com/ika/lws/download/usb-driver.zip
Install the driver by running the setup file. Connect the IKA device through the USB data cable to the PC. The data communication runs through a virtual COM port.
Note: The USB driver is unnecessary for Windows 10 system. Don't install it for Windows 10 system!

/// RS 232 interface:

Configuration:
- The functions of the interface connections between the device and the automation system are chosen from the signals specified in EIA standard RS 232 in accordance with DIN 66 020 Part 1.
- For the electrical characteristics of the interface and the allocation of signal status, standard RS 232 applies in accordance with DIN 66 259 Part 1.
- Transmission procedure: asynchronous character transmission in start-stop mode.
- Type of transmission: full duplex.
- Character format: character representation in accordance with data format in DIN 66 022 for start-stop mode. 1 start bit; 7 character bits; 1 parity bit (even); 1 stop bit.
- Transmission speed: 9600 bit/s.
- Data flow control: none.
- Access procedure: data transfer from the device to the computer takes place only at the computer's request.

/// Command syntax and format:

The following applies to the command set:
- Commands are generally sent from the computer (Leader) to the device (Follower).
- The device sends only at the computer's request. Even fault indications cannot be sent spontaneously from the device to the computer (automation system).
- Commands are transmitted in capital letters.
- Commands and parameters including successive parameters are separated by at least one space (Code: hex 0x20).
- Each individual command (incl. parameters and data) and each response are terminated with Blank CR LF (Code: hex 0x20 hex 0x0d hex 0x20 hex 0x0A) and have a maximum length of 80 characters.
- The decimal separator in a number is a dot (Code: hex 0x2E).

The above details correspond as far as possible to the recommendations of the NAMUR working party (NAMUR recommendations for the design of electrical plug connections for analogue and digital signal transmission on individual items of laboratory control equipment, rev. 1.1).

The NAMUR commands and the additional specific IKA commands commissioning serve only as low level commands for communication between the device and the PC. With a suitable terminal or communications program these commands can be transmitted directly to the device. The IKA software package, Labworldsoft®, provides a convenient tool for controlling device and collecting data under MS Windows, and includes graphical entry features, for motor speed ramps for example.

NAMUR Commands	Function
IN_NAME	Read the device name
IN_PV_2	Read actual temperature value
IN_SP_1	Read set temperature value
IN_SP_3	Read safety temperature value
IN_PV_3	Read heating time
OUT_SP_1 xx	Adjust the set temperature value xxx
START_1	Start the heating function
STOP_1	Stop the heating function
RESET	To reset device
OUT_WD1@n	Watchdog mode 1: if event WD1 should occur, the heating function is switched off and E 2 is displayed. Set watchdog time to n (20 - 1500) seconds, with watchdog time echo. This command launches the watchdog function and must be transmitted within the set watchdog time.

"Watchdog" functions, monitoring of the serial data flow:
If, once this function has been activated (see NAMUR commands), there is no retransmission of the command from the computer within the set time ("watchdog time"), the heating function is switched off in accordance with the set "watchdog" function, or is further regulated to the setpoint values previously adjusted.
The data transmission may be interrupted by, for example, a crash in the operating system, a power failure in the PC or an issue with the connection table between the computer and the device.

"Watchdog" – mode 1:
If there is an interruption in data communications (longer than the set watchdog time), the heating function is switched off and E 2 is displayed.

/// Connections between device and external devices

PC 1.1 cable:
This cable is required to connect RS 232 port to a PC.

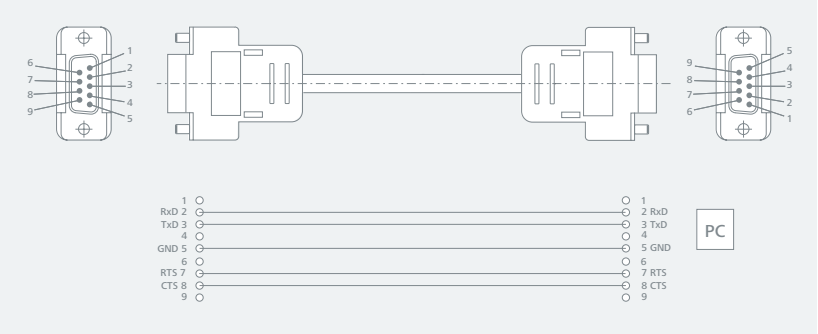

USB cable A – B:
This cable is required to connect USB port to a PC.

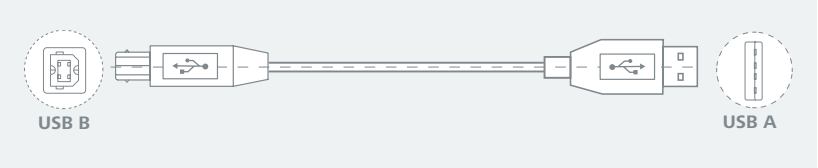

Maintenance and cleaning

› The device is maintenance-free. It is only subject to the natural wear and tear of components and their statistical failure rate.

/// Cleaning

› For cleaning disconnect the mains plug!
› Use only cleaning agents which have been approved by IKA to clean the devices: Water containing surfactant / isopropyl alcohol.
› Wear protective gloves during cleaning the devices.
› Electrical devices may not be placed in the cleansing agent for the purpose of cleaning.
› Do not allow moisture to get into the device when cleaning.
› Before using another than the recommended method for cleaning or decontamination, the user must ascertain with IKA that this method does not destroy the device.

/// Ordering spare parts

› When ordering spare parts, please give:
- device type.
- serial number, see type plate.
- position number and description of spare part, see **www.ika.com**.
- software version.

/// Repairs

› Please only send devices in for repair that have been cleaned and are free of materials which might present health hazards.
› For repair, please request the "**Safety Declaration (Decontamination Certificate)**" from IKA or use the downloaded printout of it from IKA website at **www.ika.com**.
› If your appliance requires repair, return it in its original packaging. Storage packaging is not sufficient when sending the device - also use appropriate transport packaging.

Accessories

› For accessories see **www.ika.com**.

Error codes

› The fault is shown by an error code on the display as following if the error occurs. Proceed as follows in such cases:
- Turn off the device by using the mains switch (left « "ON", right « "OFF").
- Carry out corrective measures.
- Restart the device.

Error code | Causes | Effect | Solutions

E 2 - Watchdog error

Causes	› PC does not transmit any data within the set watchdog time › connection to PC interrupted
Effect	› heating switched off
Solutions	› change watchdog time › transmit data from PC within set watchdog time (OUT_WDx@m) › check cable and plug

E 3 - Temperature in the device is higher than 80 °C

Causes	› heat accumulation between heating system and housing › permitted ambient temperature exceeded
Effect	› heating switched off
Solutions	› switch device off, leave to cool and switch on again › change experiment › observe maximum permissible ambient temperature

E 13 - Heating system safety sensor, open-circuit

Causes	› target / current different of the adjustable safety circuit for minimum temperature monitoring
Effect	› heating switched off
Solutions	› after switching on, change the SAFE TEMP to a different value; if this solves the issue, the previous value can be reset by switching the device off and on again

E 21 - Fault during heating system safety test

Causes	› safety relay does not open
Effect	› heating switched off
Solutions	› switch device off, leave to cool and switch on again

E 22 - Fault during heating system safety test

Causes	› S_CHECK cannot generate H_S_TEMP
Effect	› heating switched off
Solutions	› switch device off, leave to cool and switch on again

E 24 - Heating system temperature is higher than the set safety temperature

Causes	› safety temperature has been set to lower than the current temperature of the heating system › disconnection of the control temperature sensor of the heating system
Effect	› heating switched off
Solutions	› leave the heating system to cool › set the safety temperature higher

E 25 - Heating switching element monitoring fail

Causes	› heater control circuit switch (TRIAC) short-circuited › safety relay has interrupted the heating circuit › heater or the supply line is disconnected › disconnection of heating system safety temperature sensor
Effect	› heating switched off
Solutions	› switch device off, leave to cool and switch on again

E 26 – Heating system temperature > Heating system safety temperature (more than 40 K)

Causes	› irregular temperature distribution across the heating system due to sporadic heat dissipation › defective control or safety temperature sensor
Effect	› heating switched off
Solutions	› switch device off, leave to cool and switch on again

E 31 – Fault in the heater switch element

Effect	› heating switched off
Solutions	› contact customer service

E 44 – Heating system safety temperature is higher than the set safety temperature

Causes	› the set safety temperature has been set to lower than the safety temperature of the heating system › disconnection of the heating system safety temperature sensor
Effect	› heating switched off
Solutions	› leave the heating system to cool › set the safety temperature higher

E 46 – Heating system safety temperature > Heating system temperature (more than 40 K)

Causes	› irregular temperature distribution across the heating system due to sporadic heat dissipation › defective control or safety temperature sensor
Effect	› heating switched off
Solutions	› switch device off, leave to cool and switch on again

› If the actions described fails to resolve the fault or another error code is displayed then take one of the following steps:
- contact the service department.
- send the device for repair, including a short description of the fault.

Technical data

General data		
Voltage	220 ... 230 VAC ± 10 % 115 VAC ± 10 % 100 VAC ± 10 %	
Frequency	50 / 60 Hz	
Power input	220 ... 230 VAC 115 VAC	300 W
	100 VAC	230 W
Power input standby	1.6 W	
Interface	USB, RS 232	
Permissible ambient temperature	+ 5 ... + 40 °C	
Permissible relative humidity	80 %	
Protection class according to DIN EN 60529	IP 40	
Protection class	I	
Contamination level	2	
Overvoltage category	II	
Material heating system	Aluminium	
Dimensions (W × D × H)	265 × 270 × 220 mm	
Weight	4.6 kg	
Operation at a terrestrial altitude	max. 2000 m	
Heating function		
Heat output	220 ... 230 VAC 115 VAC	250 W
	100 VAC	189 W
Heating temperature range	RT + device self-heating ... 300 °C	
Temperature setting range	0 ... 300 °C	
Temperature display	LED	
Temperature setting	rotating / pressing knob	
Temperature setting resolution of heating system	1 K	
Temperature setting resolution of medium	1 K	
Heating rate (10 ml silicone oil)	30 K / min	
Heat-up time (25 °C ... 300±1.0 °C, 10 ml silicone oil)	15 min	
Temperature control accuracy of heating system (without vessel, heating system centre at 100 °C)	40 °C ... +150 °C: ± 1.0 °C +150 °C ... +300 °C: ± 2.0 °C	
Adjustable safety circuit	(50 °C ... 360 °C) ± 10°C	

Subject to technical changes!

Warranty

› In accordance with IKA Terms and Conditions of Sale, the warranty period is 24 months. For claims under the warranty please contact your local dealer. You may also send the device direct to our factory, enclosing the delivery invoice and giving reasons for the claim. You will be liable for freight costs.

› The warranty does not cover worn out parts, nor does it apply to faults resulting from improper use, insufficient care or maintenance not carried out in accordance with the instructions in this operating instructions.

Appendix A “Viscosity ranges / Shear rate factors“

Spindle	Viscosity (cP)	Shear Rate sec^{-1}	Sample Volume (mL)
	lo-vi		
VOL-SP 6.7	3 - 10,000	1.32N	8.0
VOL-SP 9.0	30 - 100,000	0.34N	10
VOL-SP 9.4	60 - 200,000	0.28N	9.5

Spindle	Viscosity (cP)			Shear Rate sec^{-1}	Sample Volume (mL)
	me-vi	hi-vi I	hi-vi II		
VOL-SP 7.1	50 - 166,000	100 - 333,000	400 - 1,333,000	0.93N	8.0
VOL-SP 10.4	250 - 833,000	500 - 1,666,000	2,000 - 6,666,000	0.34N	10.5
VOL-SP 11.0	500 - 1,666,000	1,000 - 3,330,000	4,000 - 13,333,000	0.28N	11.5
VOL-SP 13.5	1,000 - 3,333,000	2,000 - 6,666,000	8,000 - 26,666,000	0.25N	13.0

Viscosity range at 0.3 - 100 rpm
N = rpm

Appendix B “Range coefficient“

Using the “Range coefficient“, the maximum viscosity that can be measured with a specific spindle can be quickly determined.
1. Identify the selected spindle and the viscometer spring sensor (lo-vi/me-vi/hi-vi I/hi-vi II).
2. Find the “Range coefficient“ in below table.
3. Divide the range coefficient by the spindle speed.
E.g.: If you choose me-vi viscometer with VOL-SP-6.7 spindle: Range coefficient is 32,000.
At speed of 10 rpm, the maximum viscosity (mPa·s) is 32,000/10 = 3,200 mPa·s

Spindle	lo-vi	me-vi	hi-vi I	hi-vi II
VOL-SP-6.7	3,000	32,000	64,000	256,000
VOL-SP-7.1	4,688	50,000	100,000	400,000
VOL-SP-10.4	23,440	250,000	500,000	2,000,000
VOL-SP-11.0	46,880	500,000	1,000,000	4,000,000
VOL-SP-13.5	93,750	1,000,000	2,000,000	8,000,000
VOL-SP-9.0	30,000	320,000	640,000	2,560,000
VOL-SP-9.4	60,000	640,000	1,280,000	5,120,000

Appendix C “ASTM Specifications“

The following ASTM specifications describe the use of IKA viscometers and accessories.

D 115-17	Methods of Testing Varnishes Used for Electrical Insulation
D 789-15	Test Methods for Determination of Relative Viscosity, Melting Point, and Moisture Content of Polyamide (PA)
D 1076-15	Specification for Rubber-Concentrated, Ammonia Preserved, Creamed and Centrifuged Natural Latex
D 1417-16	Methods of Testing Rubber Latices- Synthetic
D 1439-15	Methods of Testing Sodium Carboxymethyl-cellulose
D 1824-16	Test Method for Apparent Viscosity of Plastisols and Organosols at Low Shear Rates by Brookfield Viscometer
D 2196-15	Test Methods for Rheological Properties on Non-Newtonian Materials by Rotational (Brookfield) Viscometer
D 2364-15	Standard Methods of Testing Hydroxyethyl-cellulose
D 2556-14	Test Method for Apparent Viscosity of Adhesives Having Shear Rate Dependent Flow Properties
D 2669-16	Test Method for Apparent Viscosity of Petroleum Waxes Compounded With Additives (Hot Melts)
D 2983-17	Test Method for Low-Temperature Viscosity of Automotive Fluid Lubricants Measured by the Brookfield Viscometer
D 3236-15	Test Method for Apparent Viscosity of Hot Melt Adhesives and Coating Materials (Reapproved 1999)
D 3468-99	Standard Specification for Liquid- Applied Neoprene and Chlorosulfonated Polyethylene Used in Roofing and Waterproofing
D 3716-14	Method of Testing Emulsion Polymers for Use in Floor Polishes
D 3791-90	Standard Practice for Evaluating the Effects of Heat on Asphalts
D 4046-14	Test Method for Viscosity of Chemical Grouts by the Brookfield Viscometer (Laboratory Method)
D 4889-15	Standard Test Methods for Polyurethane Raw Materials: Determination of Viscosity of Crude or Modified Isocyanates
D 5018-89	Standard Test Method for Shear Viscosity of Coal-Tar and Petroleum Pitches (Reapproved 1999)
D 5133-01	Standard Test Method for Low Temperature, Low Shear Rate, Viscosity/Temperature Dependence of Lubricating Oils Using a Temperature-Scanning Technique
D6267-13	Standard Test Method for Apparent Viscosity of Hydrocarbon Resins at Elevated Temperatures
D6895-06	Standard Test Method for Rotational Viscosity of Heavy Duty Diesel Drain Oils at 100°C
D4402-15	Standard Test Method For Viscosity Determination Of Asphalt At Elevated Temperatures Using A Rotational Viscometer
D6080-12a	Standard Practice for Defining the Viscosity Characteristics of Hydraulic Fluids

IKA

designed for scientists

IKA-Werke GmbH & Co. KG
Janke & Kunkel-Straße 10,
79219 Staufen, Germany
Phone: +49 7633 831-0
eMail: sales@ika.de

USA
IKA Works, Inc.
Phone: +1 910 452-7059
eMail: sales@ika.net

KOREA
IKA Korea Ltd.
Phone: +82 2 2136 6800
eMail: sales-lab@ika.kr

BRAZIL
IKA Brasil
Phone: +55 19 3772 9600
eMail: sales@ika.net.br

MALAYSIA
IKA Works (Asia) Sdn Bhd
Phone: +60 3 6099-5666
eMail: sales.lab@ika.my

CHINA
IKA Works Guangzhou
Phone: +86 20 8222 6771
eMail: info@ika.cn

POLAND
IKA Poland Sp. z o.o.
Phone: +48 22 201 99 79
eMail: sales.poland@ika.com

JAPAN
IKA Japan K.K.
Phone: +81 6 6730 6781
eMail: info_japan@ika.ne.jp

INDIA
IKA India Private Limited
Phone: +91 80 26253 900
eMail: info@ika.in

UNITED KINGDOM
IKA England LTD.
Phone: +44 1865 986 162
eMail: sales.england@ika.com

VIETNAM
IKA Vietnam Company Limited
Phone: +84 28 38202142
eMail: sales.lab-vietnam@ika.com

THAILAND
IKA Works (Thailand) Co. Ltd.
Phone: +66 2059 4690
eMail: sales.lab-thailand@ika.com

TURKEY
IKA Turkey A.Ş.
Phone: +90 216 394 43 43
eMail: sales.turkey@ika.com

KENYA
IKA Works Kenya Ltd.
Phone: +254 112 323 745
eMail: sales.kenya@ika.com

UGANDA
IKA Works Kampala Limited
Phone: +254 112 323 745
eMail: sales.uganda@ika.com

SPAIN
IKA Works Spain, S. L.
Barcelona
eMail: sales.spain@ika.com

20000046584_EN_ROTATEMP_062024_web

Register now: **www.ika.com/register**

www.ika.com

IKAworldwide // #lookattheblue

Technical specifications may be changed without prior notice.