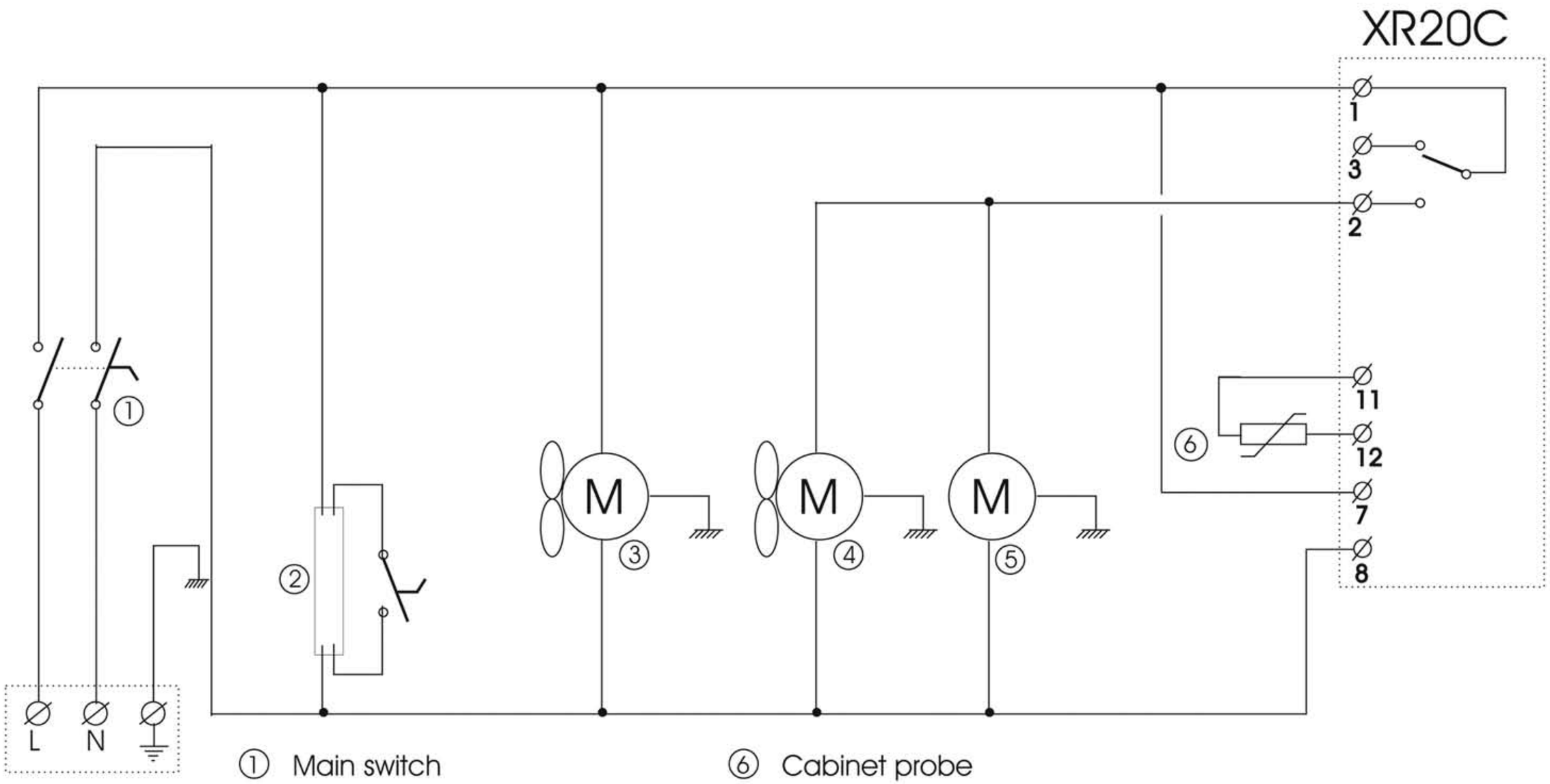

① Main switch

② LED light, each door

③ Circulation fans

④ Condenser fan

⑤ Compressor

⑥ Cabinet probe

TEFCOLD Cool Products Worldwide	Date: 140413
Model: CBC-G	Rev.: 01
Wiring diagram	Rev. by: rfj
Drawing no.:	