Virtus® Group Service

Virtus s.r.l.

via Milano 95/e
27045 Casteggio (PV) / Italy

☎ +39 0383 89 06 12
🖷 +39 0383 80 96 01

www.virtusnet.eu

Virtus Group GmbH

Hüserstraße 53
59075 Hamm / Germany

☎ +49 (0) 23 81 / 973 71 – 0
🖷 +49 (0) 23 81 / 973 71 – 88

www.virtusnet.de

Mod./Type:	_70/... GRACQG - _90/... GRACQG EXTREME	cod./num.	2531695.00
		data/date:	18/06/2014

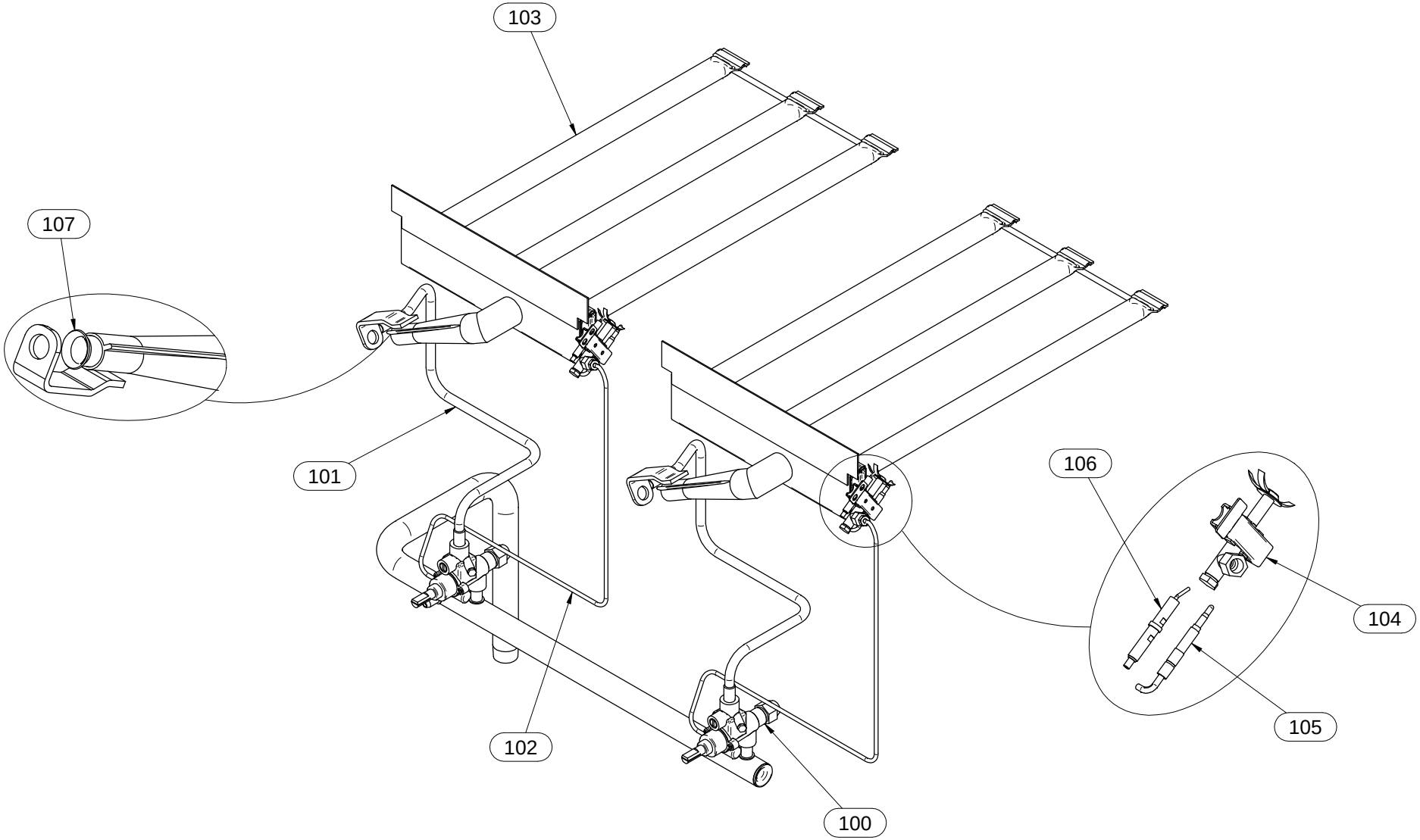

Mod./Type:	_90/... GRACQG	cod./num.	2532023.00
	\	data/date:	20/01/2015

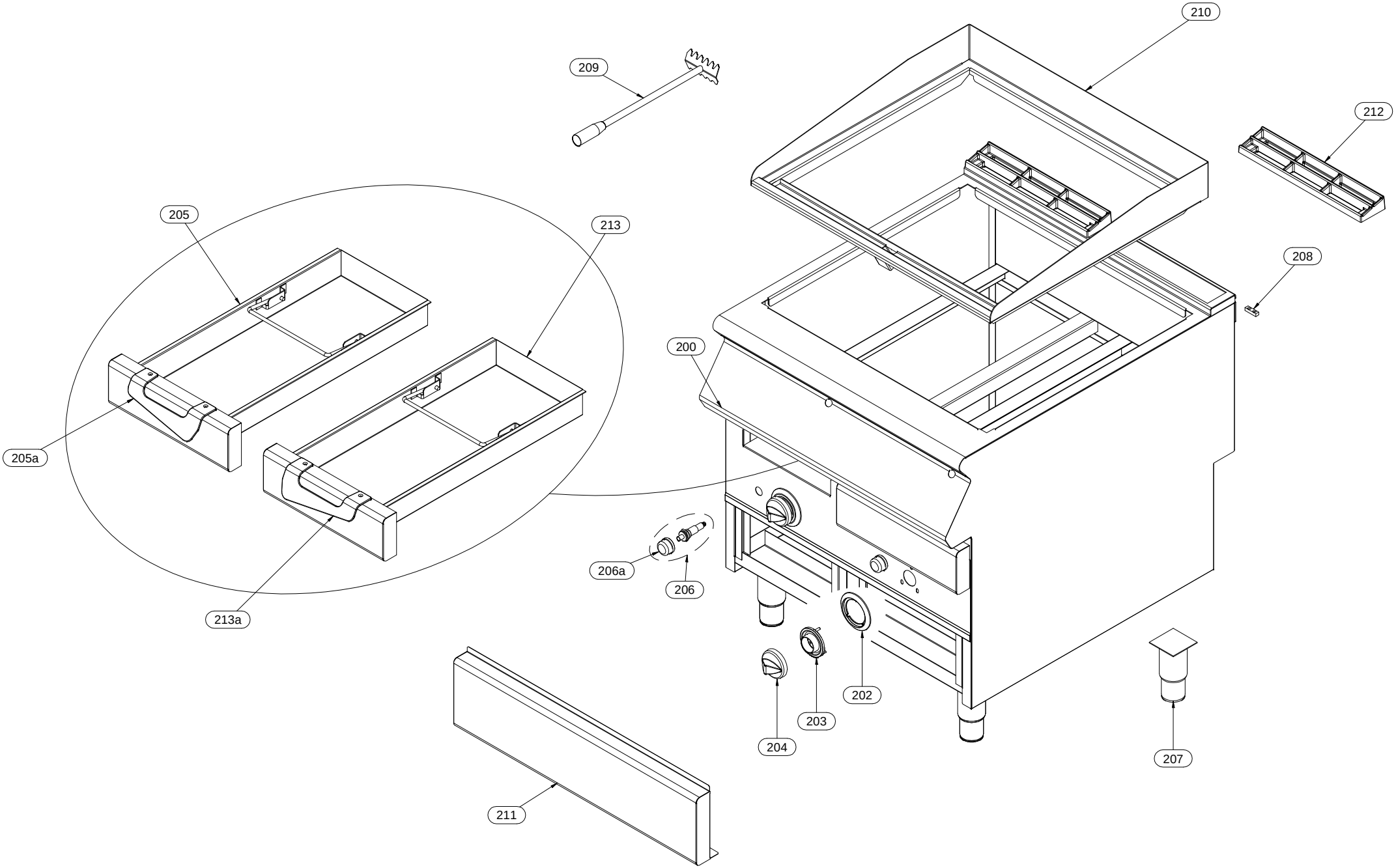

Mod.:	_70/... GRACQG - _90/… GRACQG EXTREME			cod. / num. 2531696.00 data / date 19/06/2014 rif. / ref. 2531695.00		_70/40 GRACQG	_70/80 GRACQG	_90/40 GRACQG	_90/80 GRACQG	NOTE
POS.	DESCRIZIONE	DESCRIPTION	DENOMINATION	BENENNUNG	COD.	Q. ty				
100	RUBINETTO GAS	GAS TAP	ROBINET GAZ	GASHAHN	671.031.00 *	1	2	1	2	
101	TUBO GAS	GAS PIPE	TUBE GAZ	GASROHR	256.296.00	1	2	1	2	
102	TUBO GAS	GAS PIPE	TUBE GAZ	GASROHR	256.297.00	1	2	1	2	
103	BRUCIATORE	BURNER	BRULEUR	BRENNER	672.174.00 *	1	2			
					972.043.00			1	2	
104	GRUPPO PILOTA	PILOT GROUP	GROUPE VEILLEUSE	ZÜNDBRENNER GRUPPE	672.057.00 *	1	2	1	2	
105	TERMOCOPPIA	THERMOCOUPLE	THERMOCOUPLE	THERMOELEMENT	672.099.00 *	1	2	1	2	
106	CANDELA ACCENSIONE	IGNITION ELECTRODE	BOUGIE D'ALLUMAGE	KERZE SCHNELLBRENNER	672.060.00 *	1	2	1	2	
107	BOCCOLA REGOLAZIONE ARIA	AIR REGULATION BUSHING	BAGUE DE RÉGULATION AIR	LUFTREGLERBÜCHSE	672.021.00 *	1	2	1	2	
108										
109										
110										
111										
112										
113										
114										
115										
116										
117										
118										
119										
120										
121										
122										
123										
124										
125										
126										
127										
128										
129										
130										
131										
132										
133										
134										
135										

Mod.:	_90/… GRACQG			cod. / num. 2532024.00 data / date 20/01/2015 rif. / ref. 2532023.00		VS90/40 GRACQG	VS90/80 GRACQG	NOTE
POS.	DESCRIZIONE	DESCRIPTION	DENOMINATION	BENENNUNG	COD.	Q.ty		
200	CRUSCOTTO	CONTROL PANEL	BANDEAU	BEDIENBLENDE	6111620.00	1		
					6111621.00		1	
201								
202	SERIGRAFIA	SCREEN PRINT	SÉRIGRAPHIE	SIEBDRUCK	910.163.00	1	2	
203	LABIRINTO	LABYRINTH	LABYRINTHE	LABYRINTH	256.218.00	1	2	
204	MANOPOLA	KNOB	BOUTON	DREHKNOPF	951.061.00 *	1	2	
205	CASSETTO	DRAWER	TIROIR	SCHUBLADE	910.556.00	-	1	
205a	MANIGLIA	HANDLE	POIGNÉE	HANDGRIFF	9211712.00	-	1	
206	ASSIEME PIEZO	PIEZO ASSEMBLY	ENSEMBLE PIÉZO	PIEZO-GRUPPE	912.091.00 *	1	2	
206a	CAPPUCCIO	CAP	CAPUCHON	KAPPE	951.047.00 *	1	2	
207	PIEDINO	FOOT	PIED	STELLFUSS	912.090.14 *	4	4	
208	PIASTRINA GIUNZIONE	FIXING PLATE	PLAQUETTE FIXAGE	BEFESTIGUNGSPLATTE	941.130.00	1	1	
209	RASCHIETTO	SCRAPER	RACLETTE	SCHABER	610.272.00	1	1	
210	PARASPRUZZI	SPLASH GUARD	PROTECCION ANTI-ÉCLABOUSSURES	SPRITZSCHUTZ	9111366.00	1		
					9111367.00		1	
211	FACCIATA INFERIORE	FRONT LOWER PART	PARTIE FRONTALE INFÉRIEUR	UNTERE SEITE	6211544.00	1		
					6211549.00		1	
212	GRIGLIA CAMINO	FLUE GRIDDLE	GRILLE POUR CHEMINÉE	KAMINROST	982.024.00	1	2	
213	CASSETTO	DRAWER	TIROIR	SCHUBLADE	910.555.00	1	1	
213a	MANIGLIA	HANDLE	POIGNÉE	HANDGRIFF	9211711.00	1	1	
214								
215								
216								
217								
218								
219								
220								
221								
222								
223								
224								
225								
226								
227								
228								