Virtus® Group

service

Virtus Group GmbH

Hüserstraße 53
59075 Hamm / Germany

☎ +49 (0) 23 81 / 973 71 – 0
🖷 +49 (0) 23 81 / 973 71 – 88

www.virtusnet.de

DESPIECE TECNICO / SPARE PARTS BOM

Hornos a gas
Fours à gaz
Gas ovens
Gas heissluftdämpfer
Forni a gas
Fornos a gás

Modelos / Models:

AIC0038/F
AIC0040/F

AIC0076/F
AIC0077/F

Septiembre 2012 September

Revisado Abril 2016 April Revised

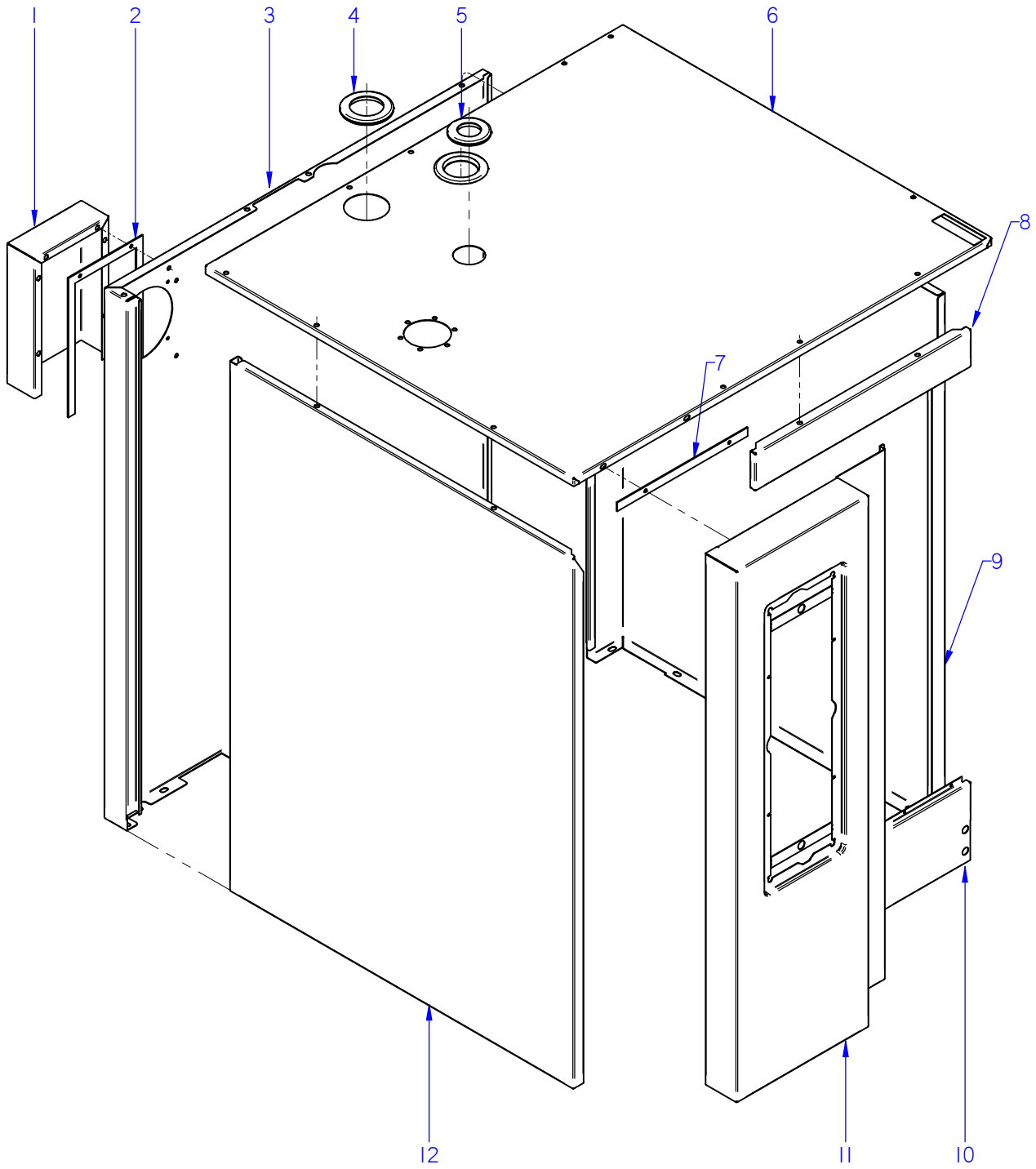

AIC0038/F AIC0076/F
AIC0040/F AIC0077/F

ITEM MARCADO EN COLOR = REPUESTO RECOMENDADO
COLOURED ITEM = RECOMMENDED SPARE PART

Nº plano / N º plane

C-3046

MOD.	HORNOS / OVEN	ZONA / ZONE	MUEBLE / UNIT	PLANO DIAGRAM	C-3046

ITEM	CODIGO REFERENCE	DENOMINACION	DENOMINATION	AIC0076/F		AIC0038/F	AIC0077/F		AIC0040/F		RECOMEND.	ELIMINADO ELIMINATED	INTRODUCID. INTRODUCED	NOTAS
1	12022537	CHAPA SEPARACION IPX5	SEPARATION PLATE IPX5	1	1	1	1	1	1					
2	12024082	JUNTA IPX5	SEAL IPX5	1	1	1	1	1	1					
3	12039596	PANEL POSTER EXTER 061	REAR EXTERIOR PANEL061	1	1	1	_	_	_					
3	12039494	PANEL POSTER EXTER 101	REAR EXTERIOR PANEL101	_	_	_	1	1	1					
4	12024231	PASAMUROS CHIMENEA 101003361	FEED THROUGH FLUE PIPE 101003361	2	2	2	2	2	2					
5	12039535	PASAMUROS Ø 38	FEED THROUGH Ø 38	1	1	1	1	1	1					
6	12044094	PANEL SUPERIOR ACG 061	SUP. EXTERIOR PANEL ACG 061	1	_	_	_	_	_					
6	12043261	PANEL SUPERIOR APG 061	SUP. EXTERIOR PANEL APG 061		1	1	_	_	_					
6	12044222	PANEL SUPE. EXTERIOR ACG 101	SUP. EXTERIOR PANEL ACG 101	_	_	_	1	_	_					
6	12043256	PANEL SUPE. EXTERIOR AG 101	SUP. EXTERIOR PANEL AG 101	_	_	_	_	1	1					
7	12039495	JUNTA PORTAMANDOS 101-102	CONTROL PANEL SEAL 101-102	1	1	1	1	1	1					
8	12039595	PANEL ANTERIOR SUP. ADV 1/1	UPPER FRONT PANEL ADV 102	1	1	1	1	1	1					
9	12043484	PANEL DERECHO ADV ELEC 061	RIGHT PANEL ADV ELEC 061	1	_	_	_	_	_					
9	12039673	PANEL DERECHO 061	RIGHT PANEL 061	_	1	1	_	_	_					
9	12043609	PANEL DERECHO ADV ELEC 101	RIGHT PANEL ADV ELEC 101	_	_	_	1	_	_					
9	12039531	PANEL DERECHO 101 G	RIGHT PANEL 101 G	_	_	_	_	1	1					
10	12043678	PANEL FRONTAL INFER. ACE	LOWER FRONT PANEL ACE	1	_	_	1	_	_					
10	12039624	PANEL FRONTAL INFER. VPE	LOWER FRONT PANELVPE	_	1	1	_	1	1					
11	12039625	PORTAMANDOS APE 061	CONTROL PANEL APE 061	1	1	1	_	_	_					
11	12043767	PORTAMANDOS APE-APG 101	CONTROL PANEL APE-APG 101	_	_	_	1	1	1					
12	12043530	PANEL EXTER. IZDO. ADV ELEC.061	REAR LEFT PANEL ADV ELE.061	1	_	_	_	_	_					
12	12039674	PANEL EXTER. IZDO. 061	REAR LEFT PANEL 061	_	1	1	_	_	_					
12	12043702	PANEL EXT. IZDO. ADV ELEC. 101	REAR LEFT PANEL ADV ELEC.101	_	_	_	1	_	_					
12	12039532	PANEL EXTER. IZDO. 101 G	REAR LEFT PANEL 101 G	_	_	_	_	1	1					

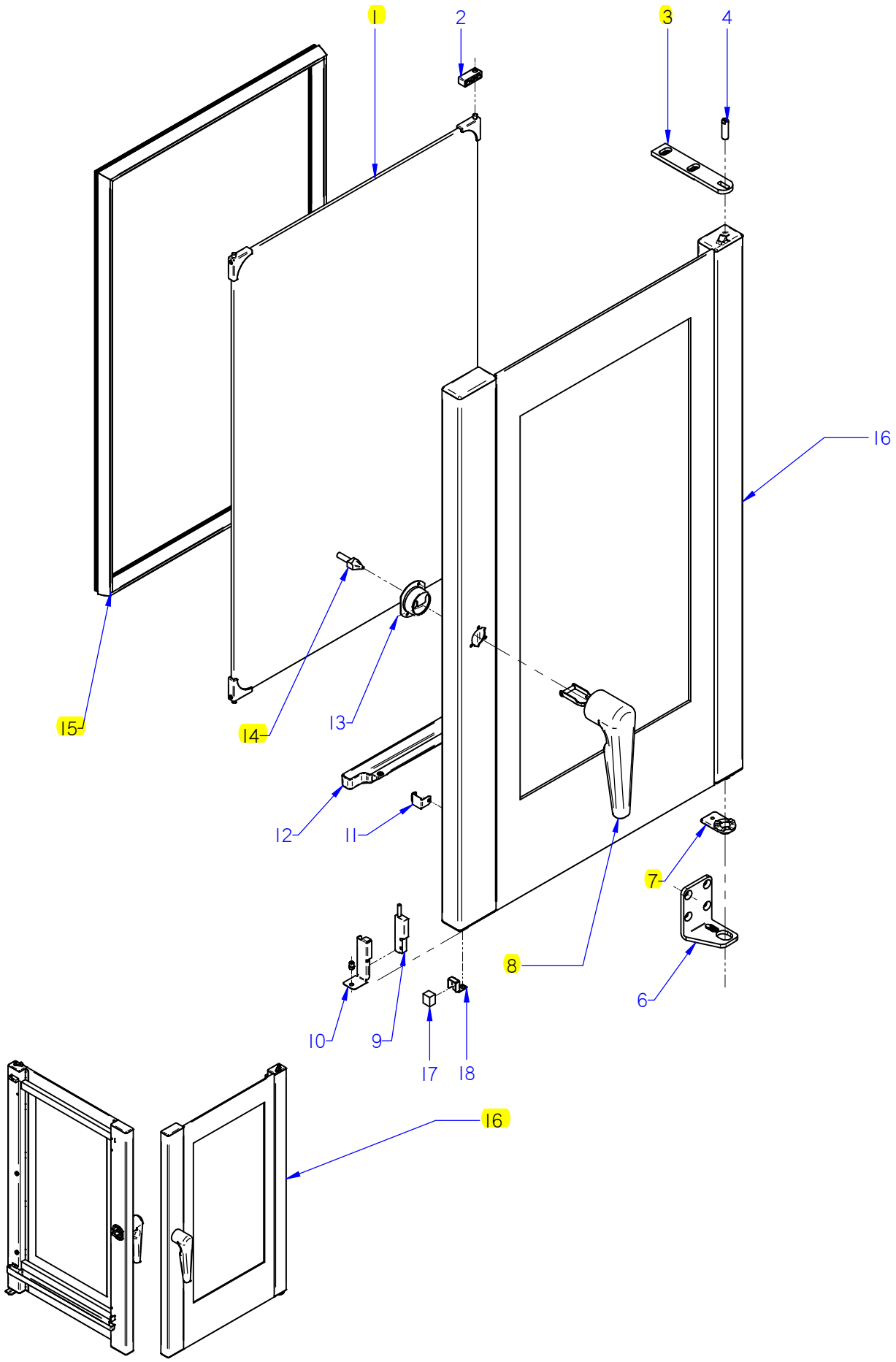

AIC0038/F AIC0076/F
AIC0040/F AIC0077/F

ITEM MARCADO EN COLOR = REPUESTO RECOMENDADO
COLOURED ITEM = RECOMMENDED SPARE PART

Nº plano / N º plane

C-3047

MOD.	HORNOS / OVEN	ZONA / ZONE	PUERTA / DOOR	PLANO DIAGRAM	C-3047

ITEM	CODIGO REFERENCE	DENOMINACION	DENOMINATION	AIC0076/F		AIC0038/F	AIC0077/F		AIC0040/F		RECOMEND.	ELIMINADO ELIMINATED	INTRODUCID. INTRODUCED	NOTAS
1	**12046041**	**KIT CRISTAL INTER. 061**	**061 INNER GLASS KIT**	**1**	**1**	**1**	_	_	_		X			
1	**12046042**	**KIT CRISTAL INTER. 101**	**101 INNER GLASS KIT**	_	_	_	**1**	**1**	**1**		X			
2	12041724	BISAGRA CRISTAL INTERIOR	INNER GLASS HINGE	2	2	2	2	2	2					
3	12039312	BISAGRA SUPERIOR	UPPER HINGE	1	1	1	1	1	1		X			
4	12023636	EJE SUPERIOR	UPPER SHAFT	1	1	1	1	1	1					
6	12043391	BISAGRA INFERIOR ADVANCE	BOTTOM HINGE ADVANCE	1	1	1	1	1	1					
7	12039311	BASE BISAGRA INFERIOR PUERTA	LOWER DOOR HINGE BASE	1	1	1	1	1	1			02.09.13		
7	12047967	BASE BISAGRA INFERIOR 6 DIEN	LOWER HINGE BASE	1	1	1	1	1	1		X		02.09.13	
8	12047580	REP. MANILLA 1/1 ADVANCE	HANDLE 1/1 ADVANCE	1	1	1	1	1	1		X			
	12010262	TORNILLO AVELLANADO M4X15	COUNTERSUNK SCREW M.4x15	3	3	3	3	3	3					
9	12024560	INTERRUPTOR MAGNETICO AC	MAGNETIC SWITCH AC	1	1	1	1	1	1		X			
10	12022166	SOPORTE MICRO PUERTA	DOOR MICRO SWITCH	1	1	1	1	1	1					
11	12041725	MUELLE CIERRE CRISTAL INTERIOR	INNER GLASS SPRING LOCK	1	1	1	1	1	1					
12	12039485	RECOGEAGUAS PUERTA 101	DOOR SPRING WATER COLLECTOR	1	1	1	1	1	1					
13	12023553	EMBELLECEDOR POSTERI. ASA	REAR TRIM HANDLE	1	1	1	1	1	1			03.03.14		
13	12091814	EMBELLECEDOR PUERTA ADV-UL	DOOR TRIM ADV-UL	1	1	1	1	1	1				03.03.14	
14	12023849	ANCLAJE PUERTA	DOOR ANCHORING	1	1	1	1	1	1					
15	12039599	JUNTA PUERTA COMPL. 061	DOOR JOINT 061	1	1	1	_	_	_		X			
15	12039475	JUNTA PUERTA COMPL. 101	DOOR JOINT 101	_	_	_	1	1	1		X			
16	**12046015**	**KIT PUERTA 061**	**DOOR 061 KIT**	**1**	**1**	**1**	_	_	_		X			
16	**12046018**	**KIT PUERTA 101**	**DOOR 101 KIT**	_	_	_	**1**	**1**	**1**		X			
17	12024303	IMAN	MAGNET	1	1	1	1	1	1					
18	12049358	SOPORTE IMAN	MAGNET SUPPORT	1	1	1	1	1	1					

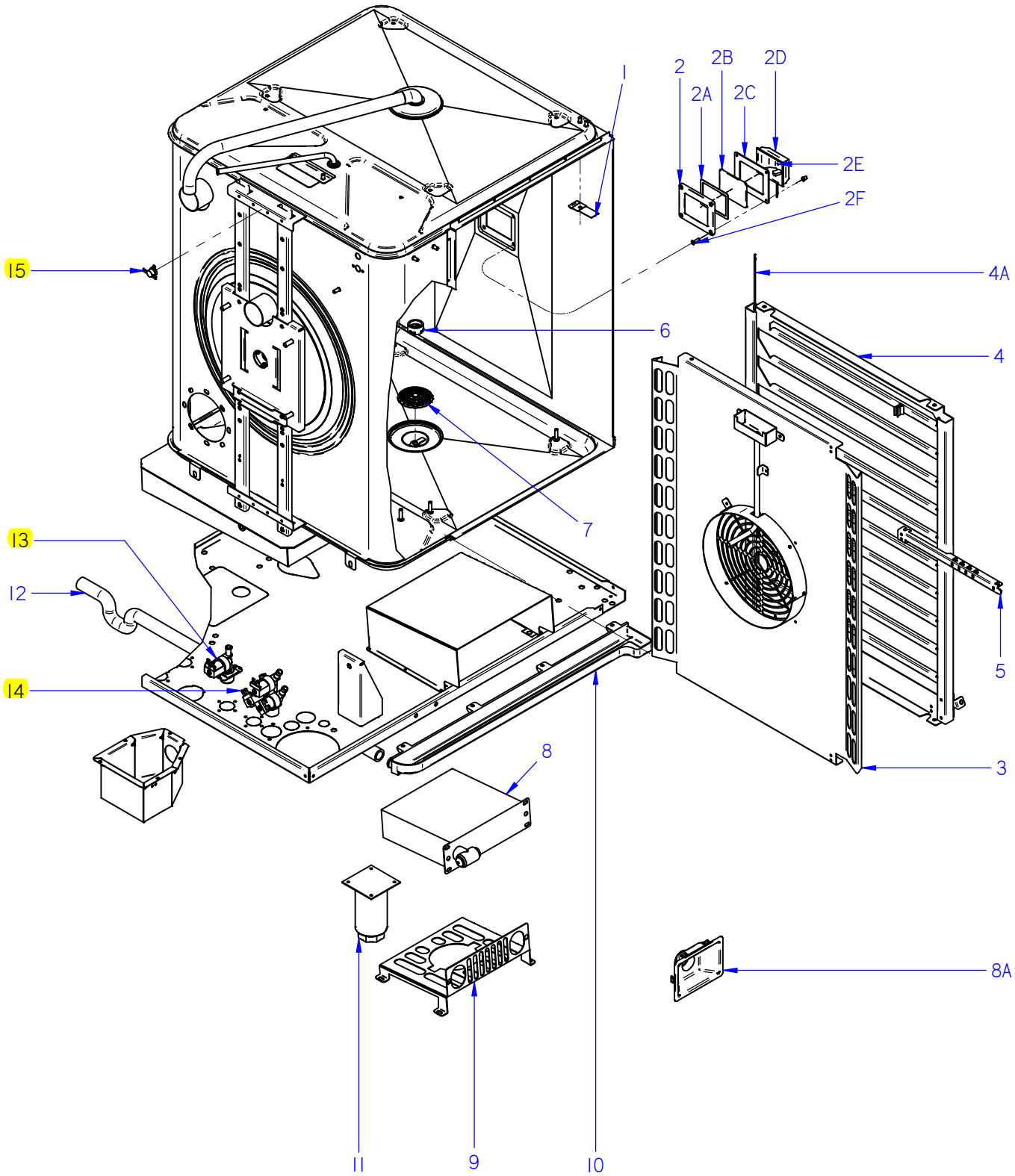

AIC0038/F AIC0076/F
AIC0040/F AIC0077/F

ITEM MARCADO EN COLOR = REPUESTO RECOMENDADO
COLOURED ITEM = RECOMMENDED SPARE PART

Nº plano / N º plane

C-3048

MOD.	HORNOS / OVEN	ZONA / ZONE	MUEBLE INTERIOR / INTERIOR OVEN	PLANO DIAGRAM	C-3048

ITEM	CODIGO REFERENCE	DENOMINACION	DENOMINATION	AIC0076/F		AIC0038/F	AIC0077/F		AIC0040/F		RECOMEND.	ELIMINADO ELIMINATED	INTRODUCID. INTRODUCED	NOTAS
1	12041767	SOPORTE SONDA PINCHO CAMARA	CAMERA PROBE SUPP. PINCHO	2	2	2	2	2	2					
2	12024464	MARCO LAMPARA	LAMP ANCHORING PLATEN	1	1	1	1	1	1					
2A	12023532	JUNTA INTERIOR LAMPARA	LAMP INNER JOINT	1	1	1	1	1	1					
2B	12023668	CRISTAL LAMPARA	LAMP GLASS	1	1	1	1	1	1					
2C	12023578	JUNTA EXTERIOR LAMPARA	LAMP OUTER JOINT	1	1	1	1	1	1					
2D	12024545	PORTALAMPARAS	LAMP HOLDER	1	1	1	1	1	1					
2E	12025123	LAMPARA 10W-12V	LIGHT 10W 12V	1	1	1	1	1	1					
2F	12010262	TORNILLO M4X15MM DIN965	M4X15MM DIN965 SCREW	4	4	4	4	4	4					
3	**12126842**	**CUBREVENTILADOR 061 GAS**	**FAN COVER 061 GAS**	**1**	**1**	**1**	_	_	_					
3	**12126840**	**CUBREVENTILADOR 061**	**FAN COVER 061**	**1**	_	_	_	_	_				**01.01.16**	
3	**12126832**	**CUBREVENTILADOR 101 GAS**	**FAN COVER 101 GAS**	_	_	_	**1**	**1**	**1**					
3	**12126831**	**CUBREVENTILADOR 101**	**FAN COVER 101**	_	_	_	**1**	_	_				**01.01.16**	
4	**12119263**	**KIT PORTABANDEJAS DCHA. 061**	**RIGHT HOLDER TRAYS ADV 061**	**1**	**1**	**1**	_	_	_					
4	**12119260**	**KIT PORTABANDEJAS IZDA 061**	**LEFT HOLDER TRAYS ADV 061**	**1**	**1**	**1**	_	_	_					
4A	12039594	TOPE BANDEJAS 061	TRAY TOP 061	2	2	2	_	_	_					
4	**12118378**	**KIT PORTABANDEJAS DCHA. 101**	**RIGHT HOLDER TRAYS ADV 101**	_	_	_	**1**	**1**	**1**					
4	**12118377**	**KIT PORTABANDEJAS IZDA 101**	**LEFT HOLDER TRAYS ADV 101**	_	_	_	**1**	**1**	**1**					
4A	12039490	TOPE BANDEJAS 101-102	TRAY TOP101-102	_	_	_	2	2	2					
5	**12126827**	**SOPORTE CORE HOLDER**	**CORE HOLDER SUPPORT**	**1**	**1**	**1**	**1**	**1**	**1**					
6	12023935	PUNTA DIFUSORA LAVADO	WASHING DISPENSER POINT	_	_	1	_	_	1					
6	12129275	PUNTA DIFUSORA ACLARADO	RINSING DISPENSER POINT	1	1	_	1	1	_				01,01,16	
7	12002681	FILTRO DESAGÜE	DRAINAGE FILTER	1	1	1	1	1	1			15.09.13		
7	12095042	FILTRO DESAGÜE Ø53	DRAINAGE FILTER Ø53	1	1	1	1	1	1				15.09.13	
8	12040977	DUCHA	SHOWER	_	1	1	_	1	1					
8A	12041736	EMBELLECEDOR DUCHA ADV.	SHOWER TRIM ADVANCE	_	1	1	_	1	1					
9	12039620	CHAPA AMARRE DUCHA	TIE PLATE SHOWER	_	1	1	_	1	1					
10	12039627	RECOGEAGUAS HORNO	SPRING WATER COLLE.	1	1	1	1	1	1					
11	12009104	PATA REGULABLE	REGULABLE LEG	4	4	4	4	4	4					
12	12039498	TUBO RECOGEAGUAS 101	COLLECT WATER PIPE 101	1	1	1	1	1	1					

MOD.	HORNOS / OVEN	ZONA / ZONE	MUEBLE INTERIOR / INTERIOR OVEN	PLANO DIAGRAM	C-3048

ITEM	CODIGO REFERENCE	DENOMINACION	DENOMINATION	AIC0076/F		AIC0038/F	AIC0077/F		AIC0040/F		RECOMEND.	ELIMINADO ELIMINATED	INTRODUCID. INTRODUCED	NOTAS
13	12025161	E.V. 230VAC 50/60Hz 1V	SOLENOID VALVE 230VAC 1 W	1	_	1	1	_	1		X			
14	12023794	E.V. 230VAC 50/60Hz 2V	SOLENOID VALVE 230VAC 2 W	1	1	_	1	1	_		X		01,01,16	
14	12115418	E.V. 230VAC 50/60Hz 3V	SOLENOID VALVE 230VAC 3 W	_	1	1	_	1	1		X			
15	12095019	TERMOSTATO_261_NA_51ºC	THERMOSTAT_261_NA_51ºC	1	1	_	1	1	_		X		01,01,16	

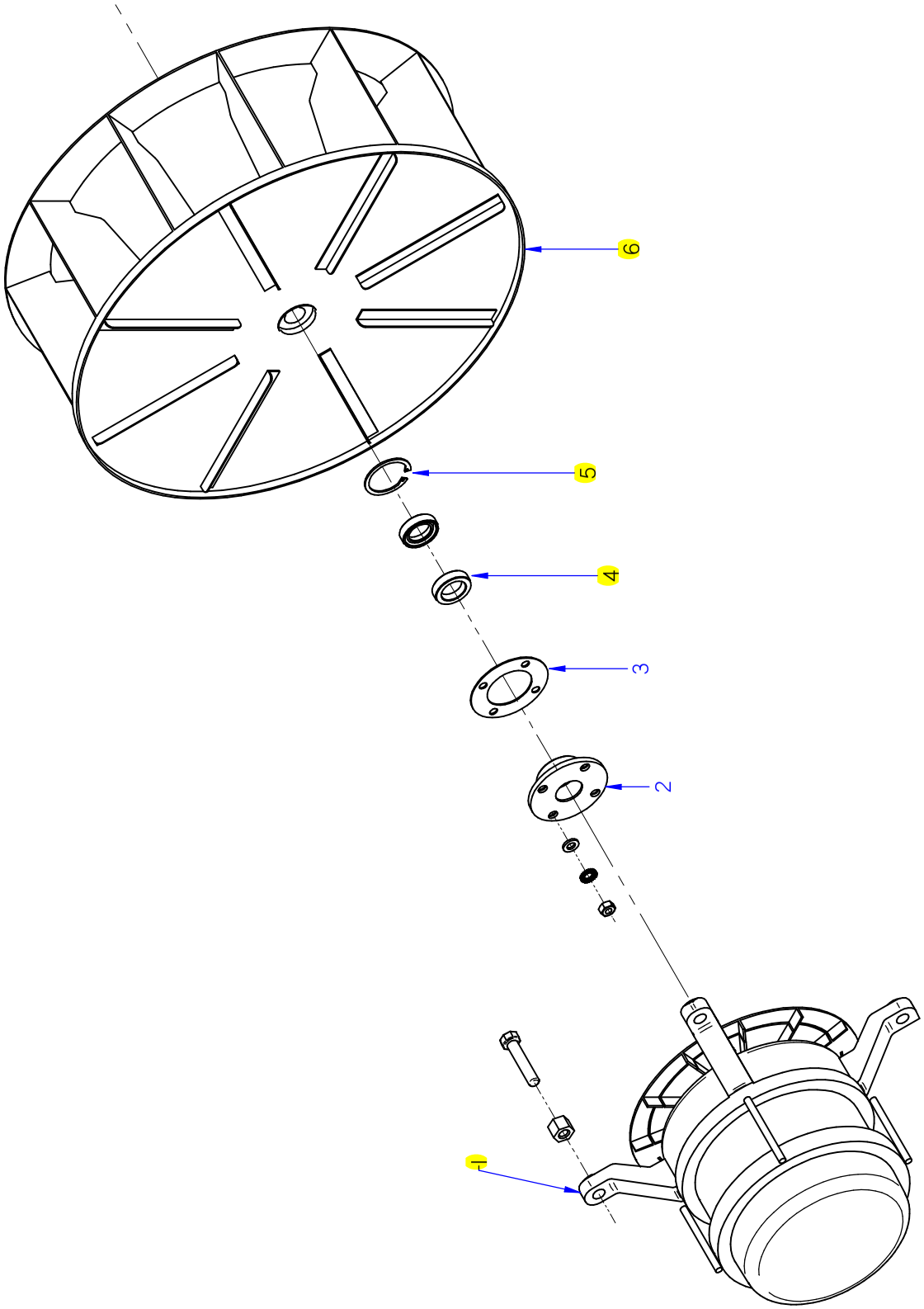

AIC0038/F AIC0076/F
AIC0040/F AIC0077/F

ITEM MARCADO EN COLOR = REPUESTO RECOMENDADO
COLOURED ITEM = RECOMMENDED SPARE PART

Nº plano / N º plane

C-3049

MOD.	HORNOS / OVEN	ZONA / ZONE	TURBINA / TURBINE	PLANO DIAGRAM	C-3049

ITEM	CODIGO REFERENCE	DENOMINACION	DENOMINATION	AIC0076/F		AIC0038/F	AIC0077/F		AIC0040/F		RECOMEND.	ELIMINADO ELIMINATED	INTRODUCID. INTRODUCED	NOTAS
1	12024325	MOTOR 230VAC3N650KW1450RPM	MOTOR 230V AC 3N650KW 1450	1	1	1	1	1	1		X			
2	12024742	CASQUILLO RETEN 10/21	SEAL BUSHING 10/21	1	1	1	1	1	1					
3	12024221	JUNTA CASQUILLO RETEN	SEAL BUSHING GASKET	1	1	1	1	1	1					
4	12024510	RETEN 17X28X7V	RETAINER 28x17x7	2	2	2	2	2	2		X			
5	12010122	ANILLO DE SEGURIDAD Ø 28X1.2	SAFETY RING 28x1,2	1	1	1	1	1	1		X			
6	12024786	TURBINA ALAB. REC. Ø280x127	TURBINE ALAB. REC. Ø280x127	1	1	1	_	_	_		X			
6	12024306	TURBINA RECTA Ø350X127 HANN.	TURBINE RECTA Ø350X127 HAN	_	_	_	1	1	1		X			

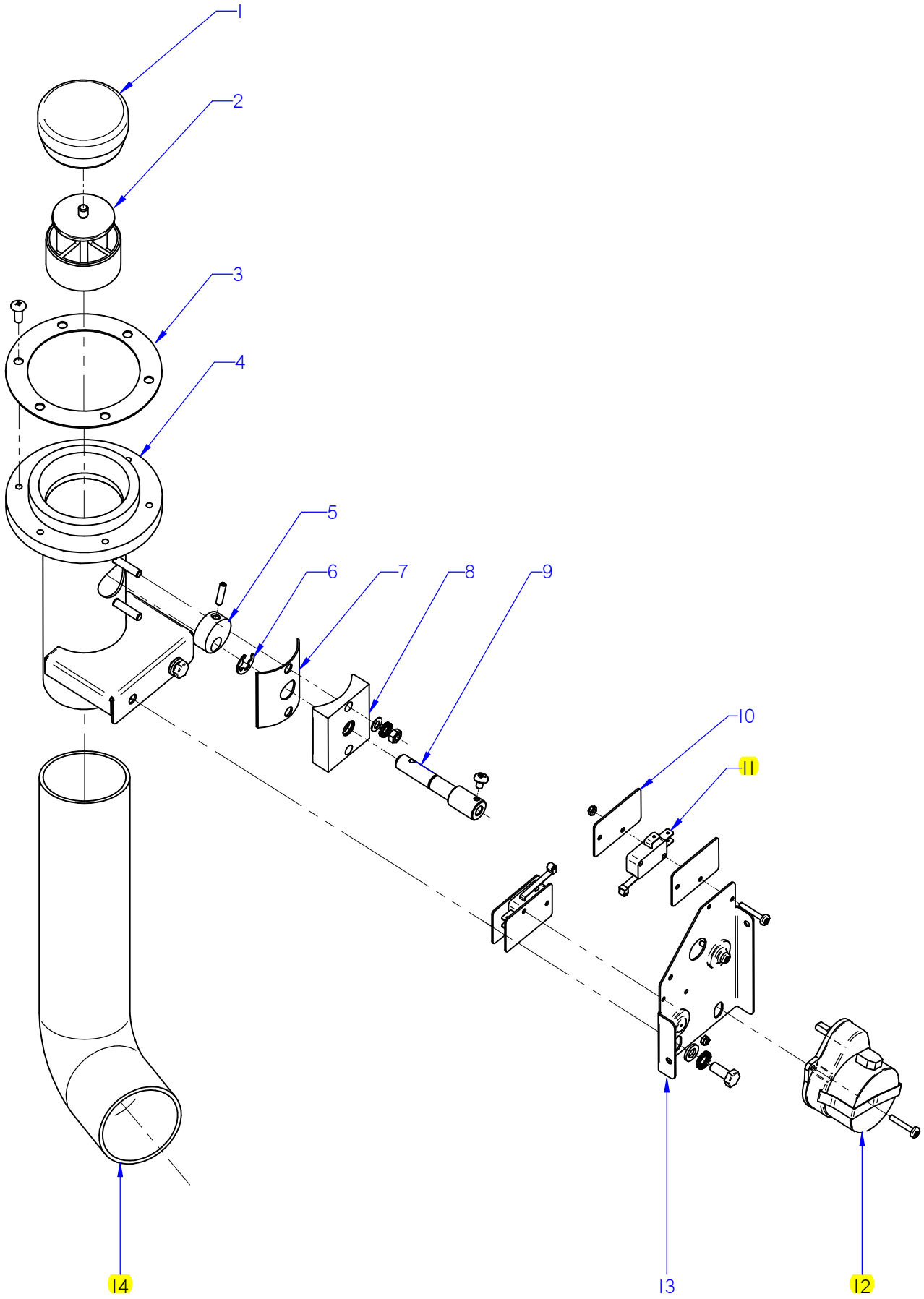

AIC0038/F AIC0076/F
AIC0040/F AIC0077/F

ITEM MARCADO EN COLOR = REPUESTO RECOMENDADO
COLOURED ITEM = RECOMMENDED SPARE PART

Nº plano / N º plane

C-3050

MOD.	HORNOS / OVEN	ZONA / ZONE	CHIMENEA / FLUEPIPE	PLANO DIAGRAM	C-3050

ITEM	CODIGO REFERENCE	DENOMINACION	DENOMINATION	AIC0076/F		AIC0038/F	AIC0077/F		AIC0040/F		RECOMEND.	ELIMINADO ELIMINATED	INTRODUCID. INTRODUCED	NOTAS
1	12024520	RETENCION DE VAPORES	CLOSE CHIMNEY	1	1	1	1	1	1					
2	12024500	GUIA RETENCION VAPORES	STEAM RETAINER GUIDE	1	1	1	1	1	1					
3	12023576	JUNTA BASE CHIMENEA	FLUEPIPE BASE SEAL	1	1	1	1	1	1					
S/Nº	12095516	JUNTA TORICA 5x1	O-RING 5x1	6	6	6	6	6	6				17.10.13	
4	12022868	CONJUNTO CHIMENEA	COMPLETE CHIMNEY	1	1	1	1	1	1			01.05.14		
4	12104226	CONJUNTO CHIMENEA	COMPLETE CHIMNEY	1	1	1	1	1	1				01.05.14	
5	12024328	LEVA EJE CHIMENEA	FLUEPIPE SHAFT CAM	1	1	1	1	1	1					
	12010258	VARILLA ROSCADA M4X16	THREADED ROD M4X16	1	1	1	1	1	1					
6	12010014	ARANDELA DE SEGURIDAD Ø8	SAFETY WASHER Ø8	1	1	1	1	1	1					
7	12023497	JUNTA EJE CHIMENEA	FLUEPIPE SHAFT SEAL	1	1	1	1	1	1					
8	12024436	GUIA EJE CHIMENEA	FLUEPIPE SHAFT GUIDE	1	1	1	1	1	1			01.05.14		
8	12098396	GUIA EJE CHIMENEA	FLUEPIPE SHAFT GUIDE	1	1	1	1	1	1				01.05.14	
	12010274	JUNTA TORICA 9.19x2.62	O-RING 9.19x2.62	1	1	1	1	1	1				01.03.13	
9	12024435	EJE CHIMENEA ELECTRICA	ELECTRIC FLUEPIPE SHAFT	1	1	1	1	1	1			01.05.14		
9	12104228	EJE CHIMENEA ELECTRICA	ELECTRIC FLUEPIPE SHAFT	1	1	1	1	1	1				01.05.14	
	12009876	TORNILLO ALOMADO M4X6 ZINC.	CURVED SCREW M4X6 ZINC.	1	1	1	1	1	1					
10	12009985	PLACA SEPARADORA	SPACER PLATE	4	4	4	4	4	4					
11	12025193	INTERRUPTOR PUERTA	DOOR SWITCH	2	2	2	2	2	2		X			
12	12024638	MOTOR CHIMENEA	FLUEPIPE MOTOR	1	1	1	1	1	1		X			
13	12022146	ESCUA. AMARRE MOTOR CHIMEN.	FLUEPIPE MOTOR FASTENING BRAC	1	1	1	1	1	1					
14	12024122	TUBO FLEXIBLE Ø53X360	FLEXIBLE TUBE Ø53X360	1	1	1	1	1	1		X			
	12009962	ABRAZADERA 40*60	CLAMP 40*60	2	2	2	2	2	2					

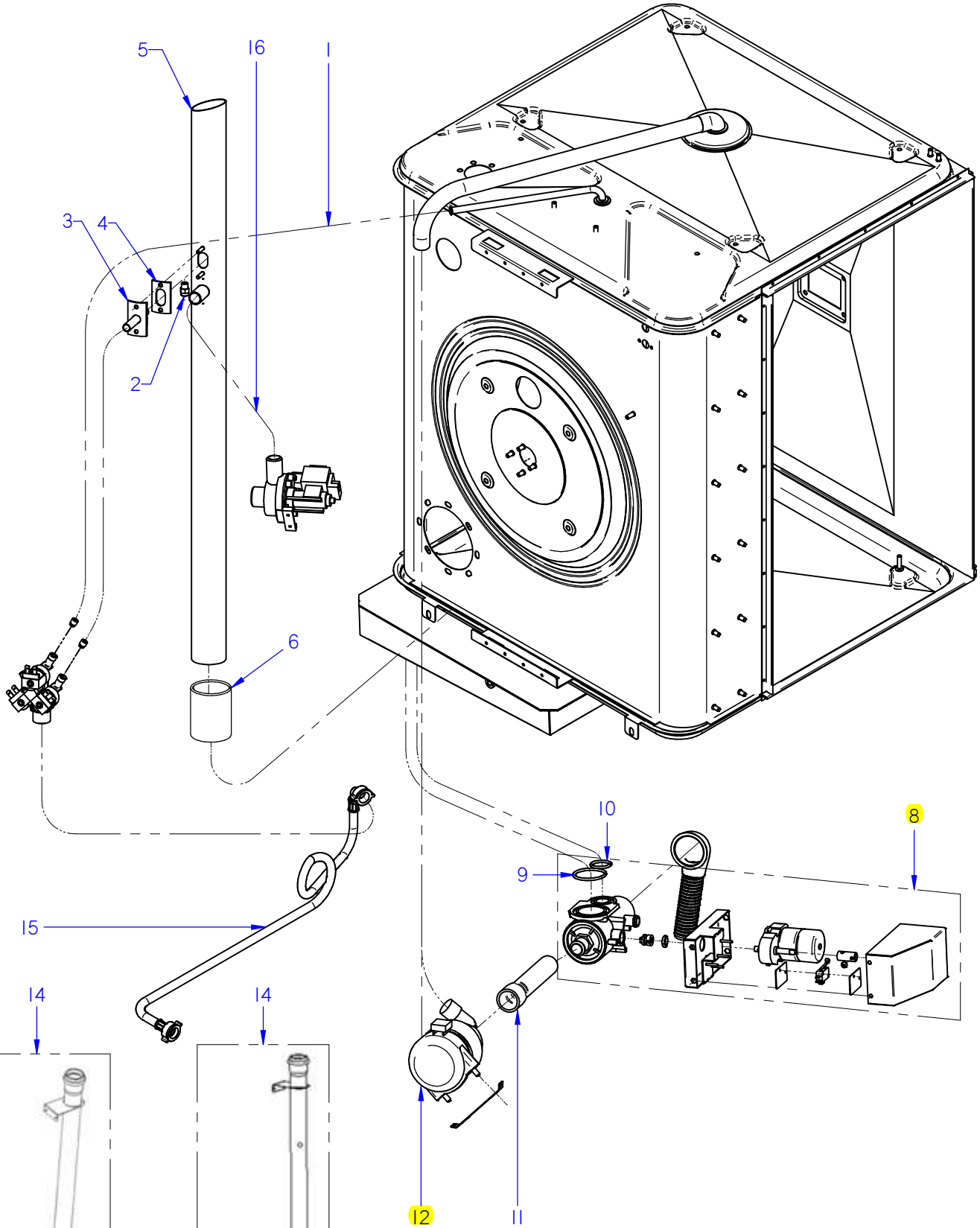

CONFIGURAC. ADVANCE PLUS
ADVANCE PLUS CONFIGURAT.

CONFIGURAC. ADVANCE / CONCEPT
ADVANCE / CONCEPT CONFIGURAT.

ITEM MARCADO EN COLOR = REPUESTO RECOMENDADO
COLOURED ITEM = RECOMMENDED SPARE PART

Nº plano / N º plane

C-3051

AIC0038/F AIC0076/F
AIC0040/F AIC0077/F

MOD.	HORNOS / OVEN	ZONA / ZONE	CONDUCCIONES DE AGUA / WATER PIPES	PLANO DIAGRAM	C-3051

ITEM	CODIGO REFERENCE	DENOMINACION	DENOMINATION	AIC0076/F		AIC0038/F	AIC0077/F		AIC0040/F		RECOMEND.	ELIMINADO ELIMINATED	INTRODUCID. INTRODUCED	NOTAS
1	11000083	T. GOMA NEGRA Ø17*10	BLACK RUBBER PIPE Ø17*10	3	3	3	3	3	3					
	12010036	ABRAZADERA 12*20	CLAMP 12-20	6	10	8	6	10	8					
2	12024000	TOBERA 1/8	NOZZLE 1/8	1	1	1	1	1	1			31.03.13		
2	12049131	BOQUILLA 1/8M-B-1-3	INJECTOR 1/8M-B-1-3	1	1	1	1	1	1				31.03.13	
3	12039468	CONDUCC. VAHOS COMPLETO	COMPLETE VAPOUR DUCT	1	1	1	1	1	1					
4	12023605	JUNTA TUBO INYECTOR	INJECTOR PIPE SEAL	1	1	1	1	1	1					
5	12043803	CHIMENEA COMPLETA ACE 601	COMPL. FLUEPIPE ACE 601	1	_	_	_	_	_					
5	12048029	CHIMENEA COMPLETA 061 AG	COMPLET FLUEPIPE 061 AG	_	1	1	_	_	_					
5	12043845	CHIMENEA COMPLETA ACE 101-102	COMPL. FLUEPIPE ACE 101-102	_	_	_	1	_	_					
5	12039505	CHIMENEA COMPLETA VPE 101	COMPLET FLUEPIPE VPE 101	_	_	_	_	1	1					
6	12047901	EMPALME SILICONA Ø53	SILICONE JOINT Ø53	1	1	1	1	1	1					
	12007943	ABRAZADERA ELASTICA 62*66	ELAST. CLAMP 62*66	2	2	2	2	2	2					
8	**12093684**	**KIT VALVULA DESAGUE ADVAN.**	**VALVE DRAIN ADVANCE KIT**	_	_	**1**	_	_	**1**		X		**12.07.13**	
9	12010081	JUNTA TORICA Ø52X3,5	O-RING Ø52X3.5	_	_	1	_	_	1					
10	12010131	JUNTA TORICA Ø33x3,5	O-RING Ø33x3.5	_	_	1	_	_	1					
11	12024407	GOMA VALVULA BOMBA GAS	PUMP VALVE RUBBER GAZ	_	_	1	_	_	1					
	12010023	ABRAZADERA 20-32	CLAMP 20-32	_	_	1	_	_	1					
	12009997	ABRAZADERA 25-40	CLAMP 25-40	_	_	1	_	_	1					
12	12024708	MOTOBOMBA ACLARADO	MOTOR-PUMP	_	_	1	_	_	1		X			
	12024463	CONDENSADOR ELEC. 250V VDE	CONDENSER ELEC. 250V VDE	_	_	1	_	_	1					
13	11000005	TUBO SILIC. ALTA Tª D31*23	HIGH TEMP. SILIC. HOSE D31*23	_	_	1	_	_	2					
14	12047404	MOD CONJUNTO DESAGUE ADV	ADV DRAIN SET MODEL	1	1	1	1	1	1				03,12,12	
15	12025198	MANGUERA ENTRADA AGUA	WATER INLET HOSE	2	2	2	2	2	2					
16	11000157	TUBO SILIC. ALTA Tª D26*18	HIGH TEMP. SILIC. HOSE D26*18	_	2	2	_	2	2					
	12009628	ABRAZAD. ELASTICA 26,7*28,1	ELAST. CLAMP 26,7*28,1	_	1	1	_	1	1					

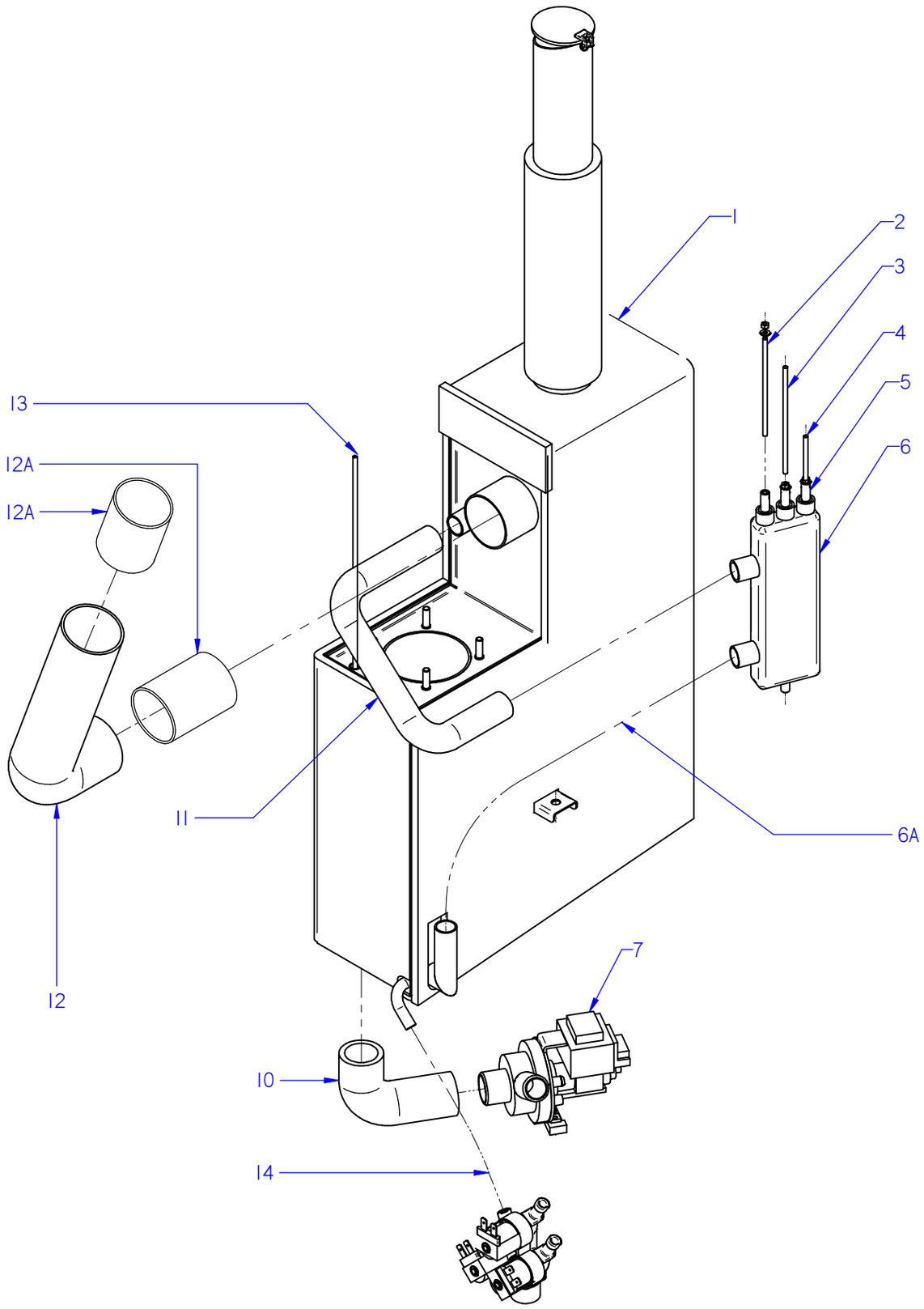

ITEM MARCADO EN COLOR = REPUESTO RECOMENDADO
COLOURED ITEM = RECOMMENDED SPARE PART

Nº plano / N º plane

C-3052

AIC0038/F
AIC0040/F

MOD.	HORNOS / OVEN	ZONA / ZONE	CIRCUITO DE VAPOR / STEAM CIRCUIT	PLANO DIAGRAM	C-3052

ITEM	CODIGO REFERENCE	DENOMINACION	DENOMINATION		AIC0038/F		AIC0040/F				RECOMEND.	ELIMINADO ELIMINATED	INTRODUCID. INTRODUCED	NOTAS
1	**12046069**	**KIT GENERADOR VAPOR 601**	**STEAM GENERATOR 601 KIT**	**1**	**1**	_	_				X			
1	**12046099**	**KIT GENERADOR VAPOR 101**	**STEAM GENERATOR 101 KIT**	_	_	**1**	**1**				X			
2	12023573	ELECTRODO ALTO	HIGH LEVEL ELECTRODE	1	1	1	1				X			
3	12023574	ELECTRODO BAJO	LOW LEVEL ELECTRODE	1	1	1	1				X			
4	12023575	ELECTRODO DE MASA	EARTH ELECTRODE	1	1	1	1				X			
	12009987	ARANDELA A4	FLAT WASHER A4	3	3	3	3							
	12009839	TUERCA EXAGONAL M4	HEXAGONAL NUT M.4º	3	3	3	3							
5	12024460	GUIA AISLANTE	INSULATION GUIDE	3	3	3	3							
6	12024419	BOTE DE NIVELES	LEVELS VESSEL	1	1	1	1					02.06.14		
6	12113061	BOTE DE NIVELES INOX	LEVELS VESSEL S.STEEL	1	1	1	1						02.06.14	
	12010044	TUERCA EXAGONAL M8 PLASTIC	HEXAGONAL NUT M8 PLASTIC	1	1	1	1							
6A	11000157	TUBO SILICONA Tº Ø 26*18	HIGH SILICON PIPE Tº Ø 26*18	2	2	2	2							
	12009628	ABRAZADERA ELASTICA 26,7*28,1	ELAST. CLAMP 26,7*28,1	4	4	4	4							
7	12039546	MOTOBOMBA 230V AC 1N 50/60Hz	PUMP 230V AC 50/60Hz 30W 1N	1	1	1	1				X			
	12010036	ABRAZADERA 12*20	CLAMP 12-20	2	2	2	2							
9	12024045	REGULADOR 8L 54.034 ROJO	REGULATOR 8L RED 54.034	1	1	1	1					10.11.13		
9	12096626	REGULADOR 8 L AZUL	BLUE REGULATOR 8L	1	1	1	1						10.11.13	
10	12039649	TUBO DESAGÜE GENERADOR	DRAIN TUBE GENERATOR	1	1	1	1							
	12009997	ABRAZADERA 25-40	CLAMP 25-40	2	2	2	2							
11	12041641	TUBO NIVELES GENERA. 061-101	TUBE GENERA. LEVELS 061-101	1	1	1	1							
12	12041855	TUBO FLEXIBLE Ø53x360 VARIL INOX	FLEXIBLE TUBE ROD Ø53x360 IN	1	1	1	1					01.01.13		
12	12047940	EMPALME GENERADOR AG 061	GENERATOR JOINT AG 061	1	1	_	_						01.01.13	
12	12048044	EMPALME GENERADOR AG 101	GENERATOR JOINT AG 101	_	_	1	1						01.01.13	
	12009962	ABRAZADERA 40-60	CLAMP 40-60	2	2	2	2							
12A	12047901	EMPALME SILICONA Ø53	SILICONE JOINT Ø53	2	2	2	2						01.01.13	
13	12023901	CONJUN. TERMOPAR VAPOR (Tg)	STEAM THERMOCOUPLE UNIT (Tg)	1	1	1	1				X			
14	11000083	T. GOMA NEGRA Ø17*10	BLACK RUBBER PIPE Ø17*10	1	1	1	1							

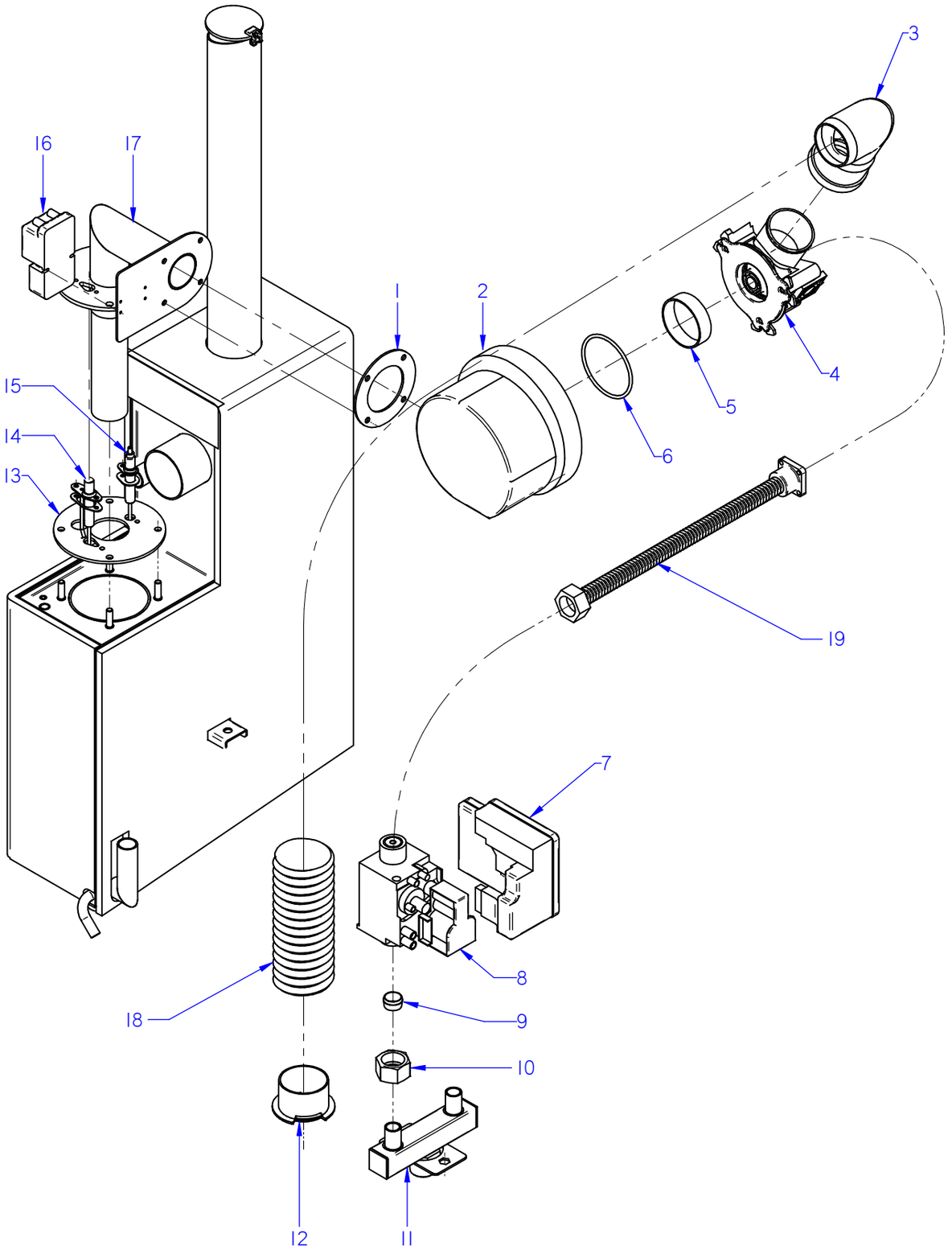

AIC0038/F
AIC0040/F

ITEM MARCADO EN COLOR = REPUESTO RECOMENDADO
COLOURED ITEM = RECOMMENDED SPARE PART

Nº plano / N º plane

C-3053

MOD.	HORNOS / OVEN	ZONA / ZONE	FUNCIONAL GAS GENERADOR FUNCTIONAL GAS GENERATOR	PLANO DIAGRAM	C-3053

ITEM	CODIGO REFERENCE	DENOMINACION	DENOMINATION		AIC0038/F		AIC0040/F				RECOMEND.	ELIMINADO ELIMINATED	INTRODUCID. INTRODUCED	NOTAS
1	12045252	JUNTA ACOP.SOPLANTE GRAFITO	JOINT COU. GRAPHITE BLOWER	1	1	1	1							
2	12044607	SOPLANTE NRG 118 55kw	BLOWER NRG 118 55kw	1	1	1	1				X			
3	12044447	TUBO DESAGUE ADV 01	DRAIN PIPE ADV 01	1	1	1	1							
4	12039540	MIXER COMPLETO	MIXER COMPLETE	1	1	1	1							
S/Nº	12041612	JUNTA TORICA 63X3	O-RING 63X3	1	1	1	1							
5	12039656	ARO VENTURI CIEGO	BLIND RING VENTURI	1	1	1	1							
6	12009940	JUNTA TORICA114x3	O-RING 114x3	1	1	1	1							
7	12039440	CAJA CONTROL DBC 579	DBC CONTROL BOX 579	1	1	1	1				X			
8	12046364	VALVULA REGUL 50HZ ADV	ADV 50HZ VALVE CONTROLL.	1	1	1	1				X			
8	12046365	VALVULA REGUL 60HZ ADV	ADV 60HZ VALVE CONTROLL.	1	1	1	1				X			
9	12045658	TOBERA Ø 3,5 BP	NOZZLE Ø 3,5 BP	1	1	1	1							
9	12039565	TOBERA Ø 4,5 GN	NOZZLE Ø 4,5 GN	1	1	1	1							
10	12008085	TUERCA 3/4	NUT 3/4	1	1	1	1					18.02.13		
10	12048850	TUERCA G 3/4	NUT G 3/4	1	1	1	1						18.02.13	
S/Nº	12008775	BICONO Ø16	BICONE Ø16	1	1	1	1							
11	12041050	ENTRADA GAS ADV 061/01 SUB	ADV GAS INLET 061/01 SUB	1	1	1	1							
12	12039679	AMARRE TUBOS AIRE	MOORING PIPES AIR	1	1	1	1							
13	12039592	061 JUNTA QUEMADOR GENERA	GENERATOR GASKET BURNER	1	1	1	1							
14	12039585	ELECTRODO IGNICION GEN 061	IGNITION ELECTRODEGEN 061	1	1	1	1				X			
S/Nº	12039587	JUNTA BUJIA GENERADOR 06/101	PLUG BOARD GENERATOR 06/101	1	1	1	1							
15	12039586	ELECTRODO DETECCI. 6/101/102	DETECTION ELECTRODE 6/101/102	1	1	1	1				X			
S/Nº	12039450	JUNTA BUJIA CONVECCION 102	SPARK CONVECTI. BOARD 102	1	1	1	1							
16	12039544	CHISPA BRAHMA	BRAHMA SPARK	1	1	1	1				X			
17	12039583	QUEMADOR GENERADOR 06/101	BURNER GENERATOR 06/101	1	1	1	1				X			
18	11000232	TUBO AIRE VULCANO PUZ 50	AIR TUBE VULCANO PUZ 50	1	1	1	1							
19	12039568	TUBO GAS FLEXIBLE 500	FLEXIBLE GAS PIPE 500	1	1	1	1							

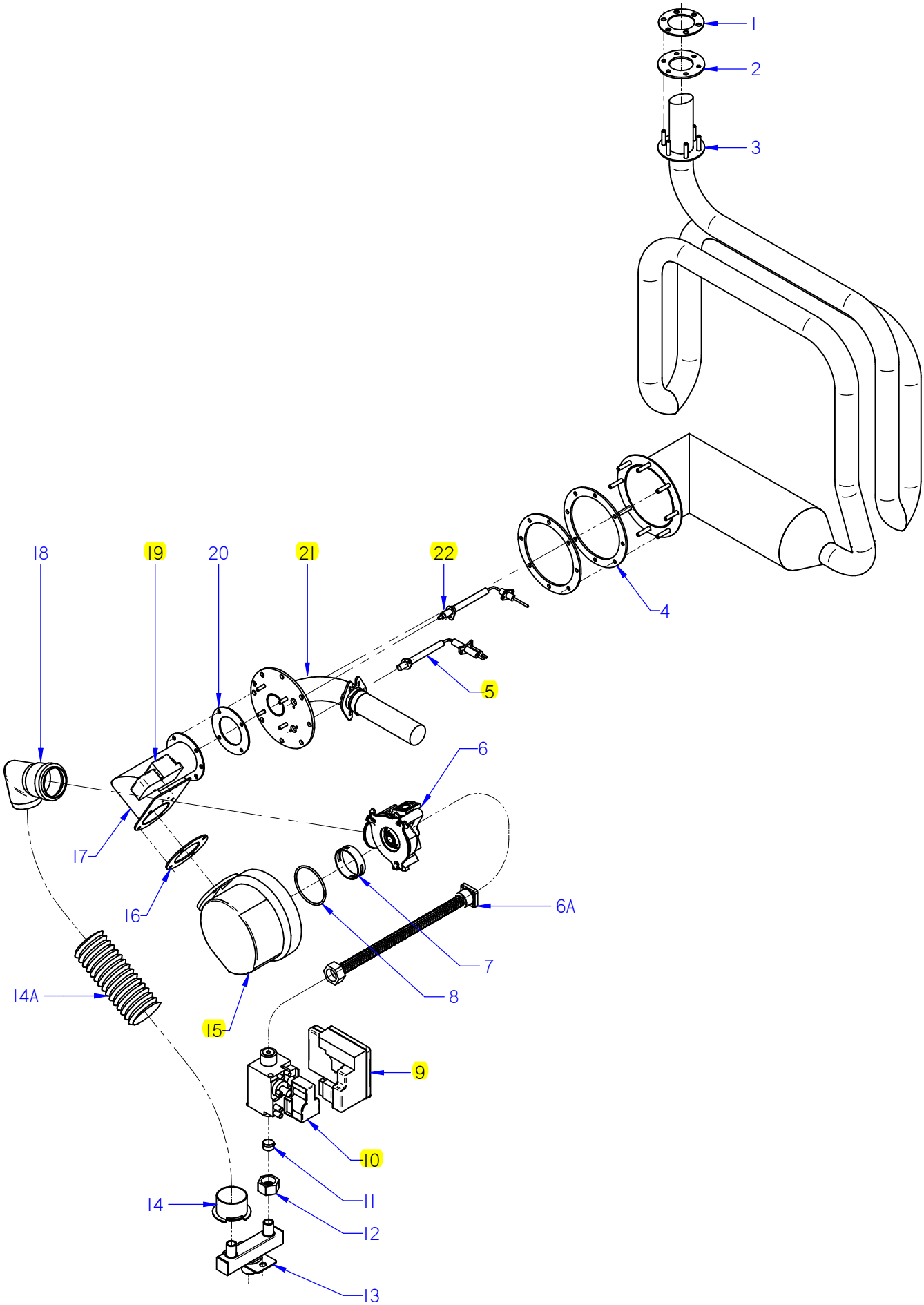

AIC0038/F AIC0076/F
AIC0040/F AIC0077/F

ITEM MARCADO EN COLOR = REPUESTO RECOMENDADO
COLOURED ITEM = RECOMMENDED SPARE PART

Nº plano / N º plane

C-3054

MOD.	HORNOS / OVEN	ZONA / ZONE	FUNCIONAL GAS CONVECCION FUNCTIONAL GAS CONVECTION	PLANO DIAGRAM	C-3054

ITEM	CODIGO REFERENCE	DENOMINACION	DENOMINATION	AIC0076/F		AIC0038/F	AIC0077/F		AIC0040/F		RECOMEND.	ELIMINADO ELIMINATED	INTRODUCID. INTRODUCED	NOTAS
1	12039653	061 CHAPA CIERRE INTERCAMB.	EXCHANGES CLOSING PLATE 061	1	1	1	_	_	_					
1	12039517	AMARRE SALIDA CUERPO INT 101	INSIDE OUT BODY TIE 101	_	_	_	1	1	1					
2	12039652	JUNTA SALIDA INTERCAMBOR 061	OUTPUT BOARD EXCHANG. 061	1	1	1	_	_	_					
2	12039474	JUNTA SALIDA INTERCAMBOR 201	OUTPUT BOARD EXCHANG. 201	_	_	_	1	1	1					
3	12039650	INTERCAMBIAD. CALOR 061 ADV	HEAT EXCHANGER 061 ADV	1	1	1	_	_	_					
3	12039552	INTERCAMBIAD. CALOR 101ADV	HEAT EXCHANGER 101 ADV	_	_	_	1	1	1					
4	12039651	061 JUNTA ENTRADA INTERCAM	061 EXCHANGER INPUT BOARD	2	2	2	_	_	_					
4	12039559	JUNTA AMARRE QUEMADOR 101	BURNER TIE BOARD 101	_	_	_	2	2	2					
5	12039684	BUJIA CONVECCION 061	SPARK CONVECTION 061	1	1	1	1	1	1		X			
S/Nº	12039449	102 JUNTA BUJIA CONVECCION	102 SPARK CONVECTI. BOARD	1	1	1	1	1	1					
6	12039540	MIXER COMPLETO	MIXER COMPLETE	1	1	1	1	1	1					
S/Nº	12041612	JUNTA TORICA 63X3	O-RING 63X3	1	1	1	1	1	1					
6A	12039567	TUBO GAS FLEXIBLE 300-90º	FLEXIBLE GAS PIPE 300-90º	1	1	1	1	1	1					
7	12039541	ARO VENTURI ROJO	RED RING VENTURI	1	1	1	1	1	1					
8	12009940	JUNTA TORICA114x3	O-RING 114x3	1	1	1	1	1	1					
9	12039440	CAJA CONTROL DBC 579	DBC CONTROL BOX 579	1	1	1	1	1	1		X			
10	12046364	VALVULA REGUL 50HZ ADV	ADV 50HZ VALVE CONTROLL.	1	1	1	1	1	1		X			
10	12046365	VALVULA REGUL 60HZ ADV	ADV 60HZ VALVE CONTROLL.	1	1	1	1	1	1		X			
11	12039657	TOBERA Ø4,4 BP	NOZZLE Ø4,4 BP	1	1	1	_	_	_					
11	12039566	TOBERA Ø6 GN	NOZZLE Ø6 GN	1	1	1	_	_	_					
11	12039570	TOBERA Ø5 BP	NOZZLE Ø5 BP	_	_	_	1	1	1					
11	12039569	TOBERA Ø7 GN	NOZZLE Ø7 GN	_	_	_	1	1	1					
12	12008085	TUERCA 3/4	NUT 3/4	_	1	1	_	1	1			18.02.13		
12	12048850	TUERCA G 3/4	NUT G 3/4	_	1	1	_	1	1				18.02.13	
S/Nº	12008775	BICONO Ø16	BICONE Ø16	_	1	1	_	1	1					
13	12041050	ENTRADA COMP ADV 061/01 SUB	ADV GAS INLET 061/01 SUB	_	1	1	_	1	1					
14	12039679	AMARRE TUBOS AIRE	MOORING PIPES AIR	1	1	1	1	1	1					
14A	11000232	TUBO AIRE VULCANO PUZ 50	AIR TUBE VULCANO PUZ 50	1	1	1	1	1	1					
15	12044607	SOPLANTE NRG 118 55kw	BLOWER NRG 118 55kw	1	1	1	1	1	1		X			
16	12045252	JUNTA ACOP.SOPLANTE GRAFITO	JOINT COU. GRAPHITE BLOWER	1	1	1	1	1	1					

MOD.	HORNOS / OVEN	ZONA / ZONE	FUNCIONAL GAS CONVECCION FUNCTIONAL GAS CONVECTION	PLANO DIAGRAM	C-3054

ITEM	CODIGO REFERENCE	DENOMINACION	DENOMINATION	AIC0076/F		AIC0038/F	AIC0077/F		AIC0040/F		RECOMEND.	ELIMINADO ELIMINATED	INTRODUCID. INTRODUCED	NOTAS
17	12039654	CAMARA SILENCIADOR 061	CHAMBER MUFFLER 061	1	1	1	_	_	_					
17	12039560	CAMARA SILENCIADOR 101	CHAMBER MUFFLER 101	_	_	_	1	1	1					
18	12044447	TUBO DESAGUE ADV 01	DRAIN PIPE ADV 01	1	1	1	1	1	1					
19	12039544	CHISPA BRAHMA	BRAHMA SPARK	1	1	1	1	1	1		X			
20	12045252	JUNTA ACOP.SOPLANTE GRAFITO	JOINT COU. GRAPHITE BLOWER	1	1	1	1	1	1					
21	12039680	QUEMADOR CONVECCION 061	BURNER CONVECTION 061	1	1	1	_	_	_		X			
21	12039556	QUEMADOR CONVECCION 101	BURNER CONVECTION 101	_	_	_	1	1	1		X			
22	12039685	DETECTOR CONVECCION 061	CONVECTION DETECTOR 061	1	1	1	1	1	1		X			
S/Nº	12039450	JUNTA BUJIA CONVECCION 102	PLUG BOARD CONVECTION 102	1	1	1	1	1	1					

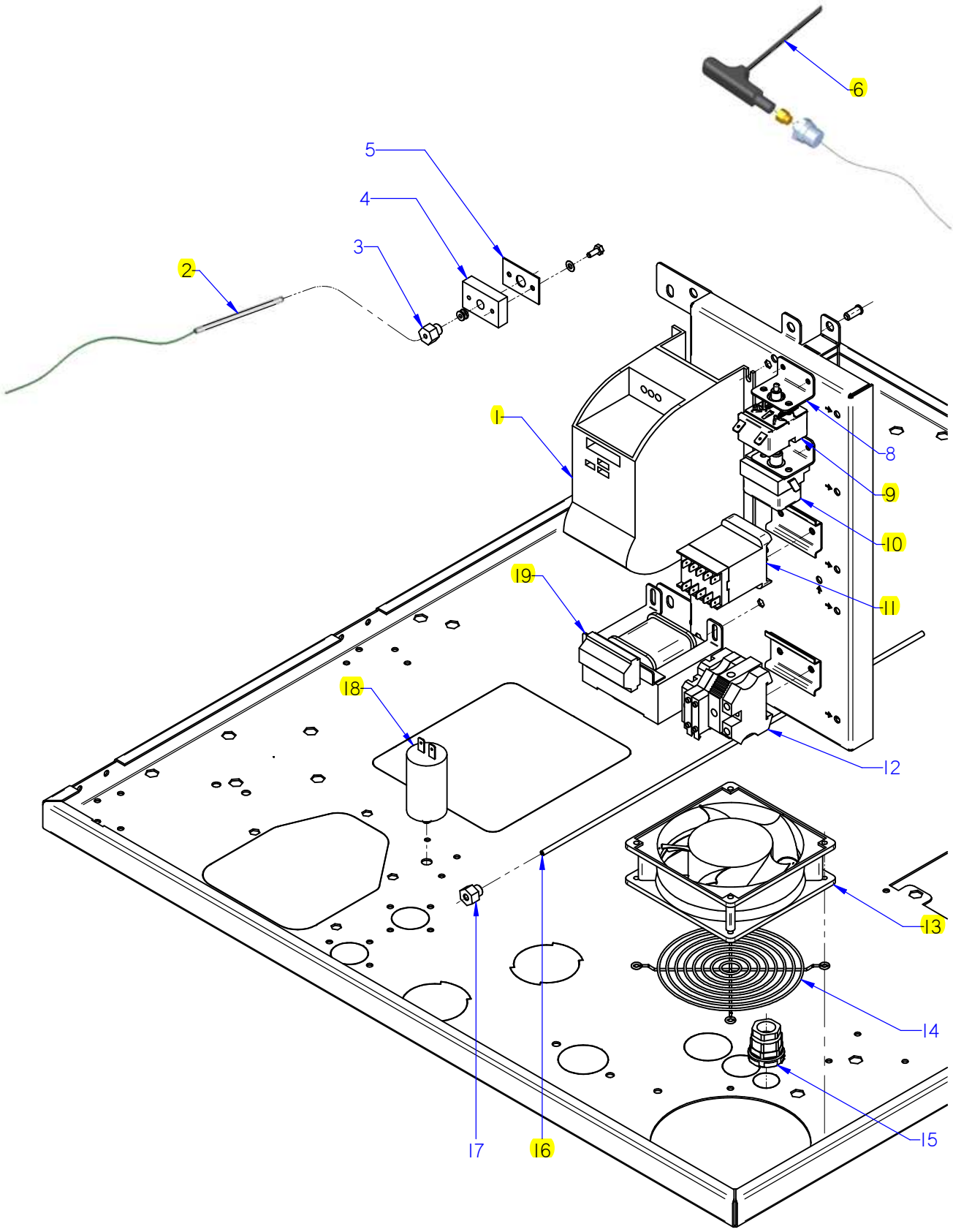

AIC0038/F AIC0076/F
AIC0040/F AIC0077/F

ITEM MARCADO EN COLOR = REPUESTO RECOMENDADO
COLOURED ITEM = RECOMMENDED SPARE PART

Nº plano / N º plane

C-3055

MOD.	HORNOS / OVEN	ZONA / ZONE	CUADRO ELECTRICO / ELECTRIC PANEL	PLANO DIAGRAM	C-3055

ITEM	CODIGO REFERENCE	DENOMINACION	DENOMINATION	AIC0076/F		AIC0038/F	AIC0077/F		AIC0040/F		RECOMEND.	ELIMINADO ELIMINATED	INTRODUCID. INTRODUCED	NOTAS
1	12048798	REP VARIADOR REGULADO ADV	REGULATED VARIATOR ADV	1	1	1	1	1	1		X			
2	12024642	CONJUN. TERMOPAR CAMARA (Tn)	CHAMBER THERMOCOUPLE (Tn)	1	1	1	1	1	1		X			
3	12023581	RACORD CIERRE SONDA	PROBE CLOSING ADAPTOR	2	2	2	2	2	2					
S/Nº	12024247	BICONO CIERRE SONDA	PROBE CLOSING BICONE	1	1	1	1	1	1					
4	12023737	BASE CIERRE SONDA	FIXING CORE PROBE	1	1	1	1	1	1					
5	12023504	JUNTA PASAMUROS SIMPLE	SIMPLE	1	1	1	1	1	1					
6	12039548	SONDA PINCHO ADVANCE	ADVANCE PROBE PINCHO	1	1	1	1	1	1		X			
8	12022001	SOPORTE TERMOS VAPOR	THERMOSTAT SUPPORT	2	2	2	2	2	2					
	12023499	TUERCA M.10x1 EGO 00.00600.075	NUT M.10x1 EGO 00.00600.075	2	2	2	2	2	2					
9	12024591	TERMOSTATO LIMITADOR 10/21	LIMITER THERMOSTAT10/21	1	1	1	1	1	1		X			
10	12024884	TERMOSTATO LIMITADOR CORTE	THERMOSTAT LIMITER	_	1	1	_	1	1		X			
11	12024011	CONTACTOR 230 V. 50-60 HZ	230 V. 50-60 HZ CONTACTOR	1	1	1	1	1	1		X			
12	12025158	BORNAS PORTA FUSIBLES	FUSE HOLDER TERMINAL	2	2	2	2	2	2					
S/Nº	12024152	FUSIBLE 10A Ø5MM 20X5	10A Ø5MM 20X5 FUSE	2	2	2	2	2	2					
	12024743	BORNA TIERRA 10 WPE-10103.O	EARTH TERMINAL10 WPE-10103.O	1	1	1	1	1	1					
	12024199	TOPE FINAL BORNA 10mm2 UL	FINAL STOP TERMINAL UL 10	1	1	1	1	1	1					
13	12023862	VENTILADOR 230V.50-60HZ	FAN 230V 50/60HZ	2	2	2	2	2	2		X			
14	12024615	PROTECCION VENTILADOR	FAN PROTECTION	1	1	1	1	1	1					
	12010087	REMACHE PLASTICO D4 L7,5-8,5	PLASTIC RIVET D4 L7,5-8,5	4	4	4	4	4	4					
15	12009966	PRENSA ESTOPAS	STUFFING BOX	1	1	1	1	1	1					
	12010121	CONTRATUERCA (GAES)790.1300.0	COUNTERNUT (GAES) 790.1300.0	1	1	1	1	1	1					
	12010046	JUNTA GOMA (GAES)	RUBBER BOARD (GAES)	1	1	1	1	1	1					
16	12041634	CONJUN.TERMOPAR VAPOR (Tv)	STEAM THERMOCOUPLE UNIT (Tv)	1	1	_	1	1	_		X			
16	12044609	CONJUNTO TERMOPAR L425 (Tv)	THERMOCOUPLE UNIT L425 (Tv)	_	_	1	_	_	1		X			
17	12041049	RACORD CIERRE SONDA Ø 4	PROBE CLOSING ADAPTOR Ø 4	1	1	1	1	1	1					
S/Nº	12043409	BICONO CIERRE SONDA Ø4	PROBE CLOSING BICONE Ø4	1	1	1	1	1	1					
18	12025135	CONDENSADOR 3 µF	CONDENSER 3 µF	_	_	1	_	_	1		X			
19	12024173	TRANSFORMADOR 12-0-12-0,24-0	TRANSFORMER 12-0-12-0,24-0	1	1	1	1	1	1		X			

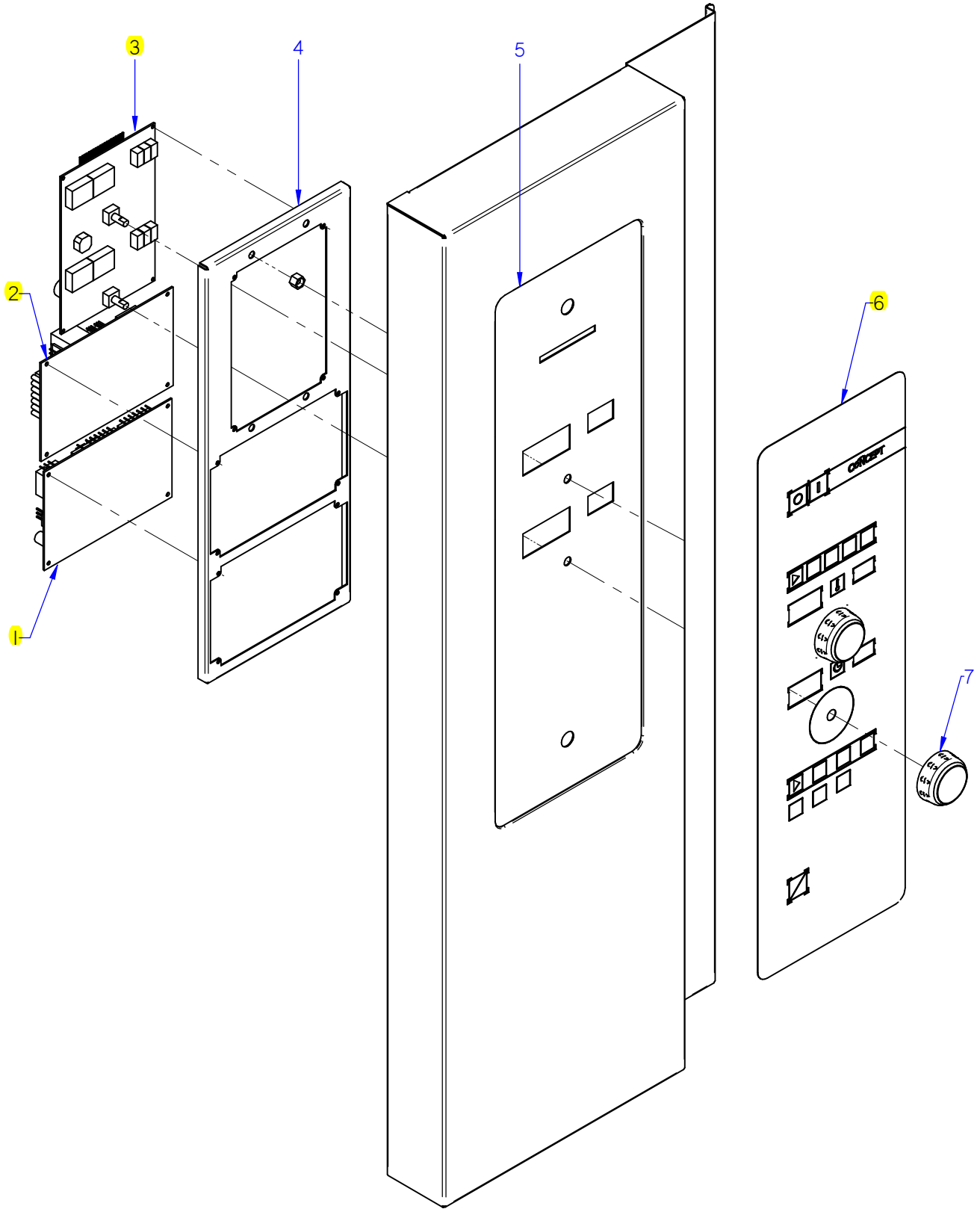

AIC0076/F
AIC0077/F

ITEM MARCADO EN COLOR = REPUESTO RECOMENDADO
COLOURED ITEM = RECOMMENDED SPARE PART

Nº plano / N º plane

C-3056

MOD.	HORNOS / OVEN	ZONA / ZONE	CONJUNTO ELECTRICO PORTAMANDOS / CONTROL HOLDER ELECTRIC UNIT	PLANO DIAGRAM	C-3056

ITEM	CODIGO REFERENCE	DENOMINACION	DENOMINATION	AIC0076/F	AIC0077/F						RECOMEND.	ELIMINADO ELIMINATED	INTRODUCID. INTRODUCED	NOTAS
1	12046673	CONTROL TARJETA GAS	GAS CONTROL BOARD	1	1							01.01.16		
1	12130677	TARJETA GAS GRABADA LAVADO	RECORDED GAS C. BOARD WASH	1	1						X		01.01.16	Serial N. 8100603816
2	12046659	CONTROL TARJETA CAM.12V AC .	CARD CONTROL 12V AC 50/60Hz	1	1							01.01.16		
2	12130672	TARJETA CAMARA GRAB. LAVADO	RECORD. CHAMBER CARD WASH	1	1						X		01.01.16	Serial N. 8100603816
3	12046671	VISUALIZADOR 12V AC 50/60Hz 12D	12V AC 50/60Hz 12D DISPLAY	1	1							01.01.16		
3	12130674	TARJ. PORTAM. GRABADA LAVADO	REC. COTRL PANEL CARD WASH	1	1						X		01.01.16	Serial N. 8100603816
4	12043668	SOPORTE PROGRA. CONCEPT ADV.	CIRCUIT SUPPORT CONCEPT AD	1	1									
5	12093219	FRENTE PORTAM. CONCEPT	CONTROL PANEL FRONT CONC.	1	1									
S/Nº	12041815	JUNTA PORTAMANDOS ADV PLUS	CONTROL PANEL SEAL ADV PLUS	1	1									
6	12044176	SERIGRAFIA ADV CONCEPT GAS	SERIGRAPHY ADV CONCEPT G	1	1							01.01.16		
5	12129318	SERIGRAFIA ACE-ACG	ACE-ACG SERIGRAPHY	1	1						X		01.01.16	Serial N. 8100603816
7	12046201	BOTON CONCEPT ADV	CONTROL BUTTON CONC. ADV	2	2									

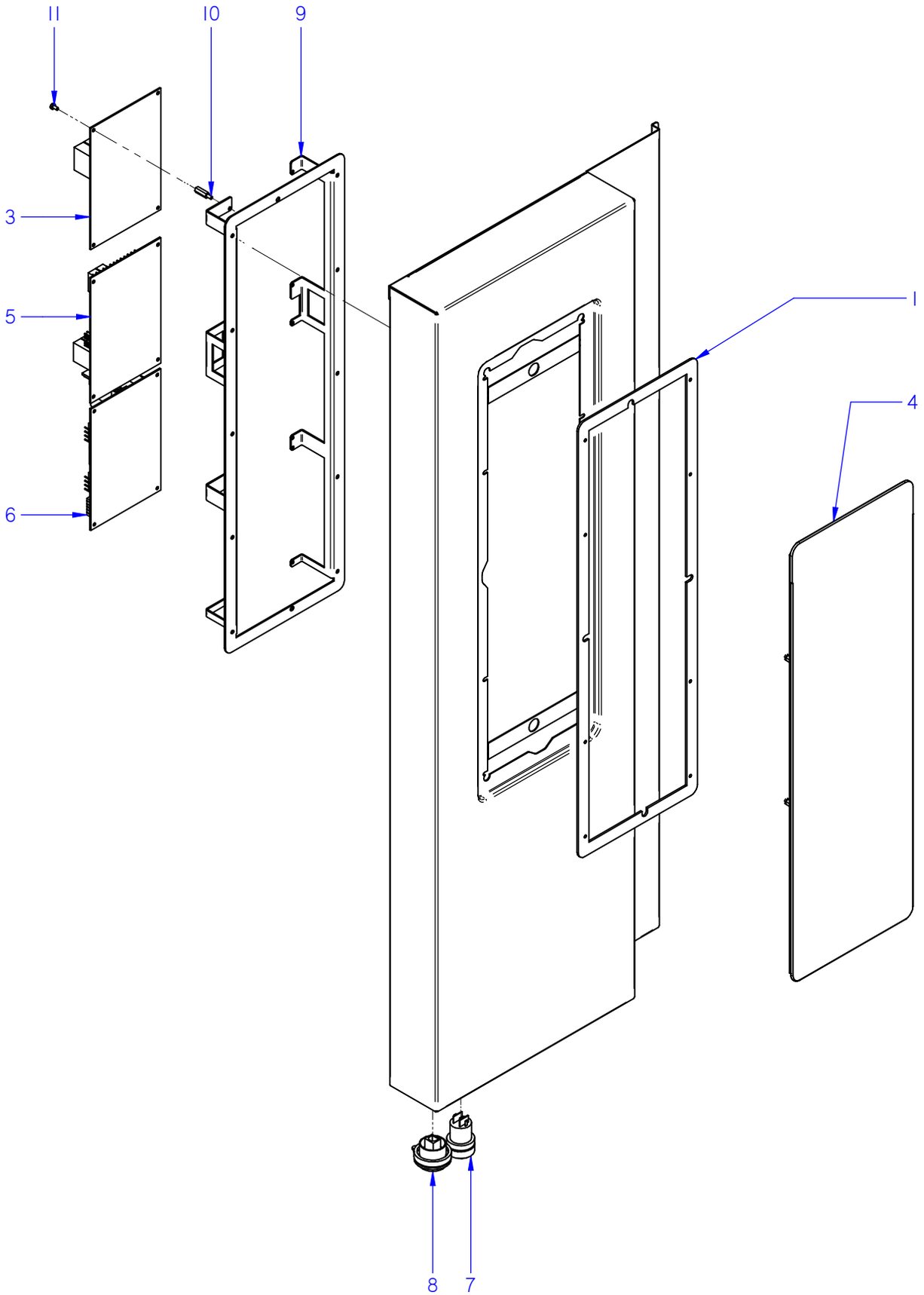

AIC0038/F
AIC0040/F

ITEM MARCADO EN COLOR = REPUESTO RECOMENDADO
COLOURED ITEM = RECOMMENDED SPARE PART

Nº plano / N º plane

C-3058

MOD.	HORNOS / OVEN	ZONA / ZONE	CONJUNTO ELECTRICO PORTAMANDOS / CONTROL HOLDER ELECTRIC UNIT	PLANO DIAGRAM	C-3058

ITEM	CODIGO REFERENCE	DENOMINACION	DENOMINATION	AIC0038/F	AIC0040/F						RECOMEND.	ELIMINADO ELIMINATED	INTRODUCID. INTRODUCED	NOTAS
1	12041815	JUNTA PORTAMANDOS ADV PLUS	CONTROL PANEL SEAL ADV PLUS	1	1									
3	12046670	CONTROL TARJETA CALD. 12V AC 50/6	CARD CONTROL 12V AC 50/60Hz	1	1						X			
4	12046579	PLAT ADV PLUS CON SOFTWARE	ADV PLUS SOFTWARE PLATF.	1	1							25.05.15		
4	12121349	PLAT ADV PLUS CON SOFTWARE	ADV PLUS SOFTWARE PLATF.	1	1								25.05.15	
5	12046659	CONTROL TARJETA CAM.12V AC .	CARD CONTROL 12V AC 50/60Hz	1	1							01.01.16		
5	12130672	TARJETA CAMARA GRAB. LAVADO	RECORD. CHAMBER CARD WASH	1	1						X		01.01.16	Serial N. 8100608593
6	12046673	CONTROL TARJETA GAS	GAS CONTROL BOARD	1	1							01.01.16		
6	12130677	TARJETA GAS GRABADA LAVADO	RECORDED GAS C. BOARD WASH	1	1						X		01.01.16	Serial N. 8100603816
7	12023927	PULSADOR SERIE MICRO	MICRO SWITCH SERIES	1	1									
8	12024064	CONECTOR USB VISUAL PLUS	VISUAL PLUS USB CONNECTOR	1	1									
S/Nº	12023647	TAPA USB VISUAL PLUS	VISUAL PLUS USB COVER	1	1									
9	12127553	SOPORTE TARJETAS PLUS	PLUS CARDS SUPPORT	1	1									
10	12025260	DISTANCIADOR M3	M3 SPACER	12	12									
11	12024424	TORNILLO AMARRE M3	M3 LOCKING SCREW	12	12									

MOD.	HORNOS / OVEN	ZONA / ZONE	VARIOS / MISCELLANEOUS	PLANO DIAGRAM	

ITEM	CODIGO REFERENCE	DENOMINACION	DENOMINATION	AIC0076/F		AIC0038/F	AIC0077/F		AIC0040/F			ELIMINADO ELIMINATED	INTRODUCID. INTRODUCED	NOTAS
	12044401	INSTAL. ELECT. ACG, 061,101,102	ELEC. INSTALL. ACG, 061,101,102	1	_	_	1	_	_					
	12039537	INSTAL. ELECT. APG,061,101,102	ELEC. INSTAL. APG,061,101,102	_	1	1	_	1	1					
	12024453	CABL. DETEC-LLAMA-CAM. 20-21	FLAME DETECT. CAMERA WIR. 20-21	1	1	1	1	1	1					
	12024399	CABL. DETEC-LLAMA-CAM. 10-21	FLAME DETECT. CAMERA WIR. 20-21	1	1	1	1	1	1					
	12008032	CABLEADO TIERRA CG9-41	EARTH WIRING CG9-41	1	1	1	1	1	1					
	12024569	CABLEADO LUZ INTERIOR HVG10-	INTERIOR LIGHT WIRING HVG10-	1	1	1	1	1	1					
	12023696	CABLEADO BMF	WIRING BMF	1	1	1	1	1	1					
	12039456	CABL. ADAPTADOR SOPLANTE	BLOWER ADAPTER WIRING	_	_	_	1	1	1					
	12024655	CABLEADO VAR-SOPL HGV20-21	BLOWER DRIVE WIR. HGV20-21	1	1	1	1	1	1					
	12008929	CABLEADO VAR-SOPL HGC-20-21	BLOWER DRIVE WIR. HGC-20-21	_	1	1	_	1	1					
	12040567	CABLEADO LAVADO 201-102-202	WIRING CABLE 201-102-202	_	_	1	_	_	1					
	12009059	CABLEADO LAVADO 06,101	WIRING CABLE 06,101	_	_	1	_	_	1					
	12008976	CABLEADO PULSADOR RESET	RESET BUTTON WIRING	_	_	1	_	_	1					
	12023775	CABLE USB VISUAL PLUS 1,5M	VISUAL PLUS USB CABLE 1,5M	_	_	1	_	_	1					
	12009257	CABLE. TRANSFORMADOR TFT UL	TRANSFORMER WIRING TFT UL	_	_	1	_	_	1					
	12009277	CD HACCP VISUAL COMPLETO	HACCP CD COMPLETE VISUAL	_	_	1	_	_	1					
	12025235	CONECTOR PASO 3,96MM 8 VIAS	CONNECTOR ROUTES 3,96MM 8	1	1	1	1	1	1					

MOD.	HORNOS / OVEN	ZONA / ZONE	REPUESTOS RECOMENDADOS RECOMMENDED SPARE PART	PLANO DIAGRAM	

ITEM	CODIGO REFERENCE	DENOMINACION	DENOMINATION	AIC0076/F		AIC0038/F	AIC0077/F		AIC0040/F			ELIMINADO ELIMINATED	INTRODUCID. INTRODUCED	NOTAS
16	**12046015**	**KIT PUERTA 061**	**DOOR 061 KIT**	**1**	**1**	**1**	_	_	_					C-3047
16	**12046018**	**KIT PUERTA 101**	**DOOR 101 KIT**	_	_	_	**1**	**1**	**1**					C-3047
1	**12046041**	**KIT CRISTAL INTER. 061**	**061 INNER GLASS KIT**	**1**	**1**	**1**	_	_	_					C-3047
1	**12046042**	**KIT CRISTAL INTER. 101**	**101 INNER GLASS KIT**	_	_	_	**1**	**1**	**1**					C-3047
7	12047967	BASE BISAGRA INFERIOR 6 DIEN	LOWER HINGE BASE	1	1	1	1	1	1					C-3047
8	12047580	REP. MANILLA 1/1 ADVANCE	HANDLE 1/1 ADVANCE	1	1	1	1	1	1					C-3047
9	12024560	INTERRUPTOR MAGNETICO AC	MAGNETIC SWITCH AC	1	1	1	1	1	1					C-3047
14	12023849	ANCLAJE PUERTA	DOOR ANCHORING	1	1	1	1	1	1					C-3047
15	12039599	JUNTA PUERTA COMPL. 061	DOOR JOINT 061	1	1	1	_	_	_					C-3047
15	12039475	JUNTA PUERTA COMPL. 101	DOOR JOINT 101	_	_	_	1	1	1					C-3047
13	12025161	E.V. 230VAC 50/60Hz 1V	SOLENOID VALVE 230VAC 1 W	1	_	1	1	_	1					C-3048
14	12023794	E.V. 230VAC 50/60Hz 2V	SOLENOID VALVE 230VAC 2 W	1	1	_	1	1	_					C-3048
14	12115418	E.V. 230VAC 50/60Hz 3V	SOLENOID VALVE 230VAC 3 W	_	1	1	_	1	1					C-3048
15	12095019	TERMOSTATO_261_NA_51ºC	THERMOSTAT_261_NA_51ºC	1	1	_	1	1	_					C-3048
1	12024325	MOTOR 230VAC3N650KW1450RPM	MOTOR 230V AC 3N650KW 1450	1	1	1	1	1	1					C-3049
4	12024510	RETEN 17X28X7V	RETAINER 28x17x7	2	2	2	2	2	2					C-3049
5	12010122	ANILLO DE SEGURIDAD Ø 28X1.2	SAFETY RING 28x1,2	1	1	1	1	1	1					C-3049
6	12024786	TURBINA ALAB. REC. Ø280x127	TURBINE ALAB. REC. Ø280x127	1	1	1	_	_	_					C-3049
6	12024306	TURBINA RECTA Ø350X127 HANN.	TURBINE RECTA Ø350X127 HAN	_	_	_	1	1	1					C-3049
11	12025193	INTERRUPTOR PUERTA	DOOR SWITCH	2	2	2	2	2	2					C-3050
12	12024638	MOTOR CHIMENEA	FLUEPIPE MOTOR	1	1	1	1	1	1					C-3050
14	12024122	TUBO FLEXIBLE Ø53X360	FLEXIBLE TUBE Ø53X360	1	1	1	1	1	1					C-3050
8	**12093684**	**KIT VALVULA DESAGUE ADVAN.**	**VALVE DRAIN ADVANCE KIT**	_	_	**1**	_	_	**1**					C-3051
12	12024708	MOTOBOMBA ACLARADO	MOTOR-PUMP	_	_	1	_	_	1					C-3051
1	**12046069**	**KIT GENERADOR VAPOR 601**	**STEAM GENERATOR 601 KIT**	_	**1**	**1**	_	_	_					C-3052
1	**12046099**	**KIT GENERADOR VAPOR 101**	**STEAM GENERATOR 101 KIT**	_	_	_	_	**1**	**1**					C-3052
2	12023573	ELECTRODO ALTO	HIGH LEVEL ELECTRODE	_	1	1	_	1	1					C-3052
3	12023574	ELECTRODO BAJO	LOW LEVEL ELECTRODE	_	1	1	_	1	1					C-3052
4	12023575	ELECTRODO DE MASA	EARTH ELECTRODE	_	1	1	_	1	1					C-3052
7	12039546	MOTOBOMBA 230V AC 1N 50/60Hz	PUMP 230V AC 50/60Hz 30W 1N	_	1	1	_	1	1					C-3052
13	12023901	CONJUN. TERMOPAR VAPOR (Tg)	STEAM THERMOCOUPLE UNIT (Tg)	_	1	1	_	1	1					C-3052

MOD.	HORNOS / OVEN	ZONA / ZONE	REPUESTOS RECOMENDADOS RECOMMENDED SPARE PART	PLANO DIAGRAM	

ITEM	CODIGO REFERENCE	DENOMINACION	DENOMINATION	AIC0076/F		AIC0038/F	AIC0077/F		AIC0040/F			ELIMINADO ELIMINATED	INTRODUCID. INTRODUCED	NOTAS
2	12044607	SOPLANTE NRG 118 55kw	BLOWER NRG 118 55kw	_	_	1	1	1	1					C-3053
7	12039440	CAJA CONTROL DBC 579	DBC CONTROL BOX 579	_	_	1	1	1	1					C-3053
8	12046364	VALVULA REGUL 50HZ ADV	ADV 50HZ VALVE CONTROLL.	_	_	1	1	1	1					C-3053
8	12046365	VALVULA REGUL 60HZ ADV	ADV 60HZ VALVE CONTROLL.	_	_	1	1	1	1					C-3053
14	12039585	ELECTRODO IGNICION GEN 061	IGNITION ELECTRODEGEN 061	_	_	1	1	1	1					C-3053
15	12039586	ELECTRODO DETECCI. 6/101/102	DETECTION ELECTRODE 6/101/102	_	_	1	1	1	1					C-3053
16	12039544	CHISPA BRAHMA	BRAHMA SPARK	_	_	1	1	1	1					C-3053
17	12039583	QUEMADOR GENERADOR 06/101	BURNER GENERATOR 06/101	_	_	1	1	1	1					C-3053
5	12039684	BUJIA CONVECCION 061	SPARK CONVECTION 061	1	1	1	1	1	1					C-3054
9	12039440	CAJA CONTROL DBC 579	DBC CONTROL BOX 579	1	1	1	1	1	1					C-3054
10	12046364	VALVULA REGUL 50HZ ADV	ADV 50HZ VALVE CONTROLL.	1	1	1	1	1	1					C-3054
10	12046365	VALVULA REGUL 60HZ ADV	ADV 60HZ VALVE CONTROLL.	1	1	1	1	1	1					C-3054
15	12044607	SOPLANTE NRG 118 55kw	BLOWER NRG 118 55kw	1	1	1	1	1	1					C-3054
19	12039544	CHISPA BRAHMA	BRAHMA SPARK	1	1	1	1	1	1					C-3054
21	12039680	QUEMADOR CONVECCION 061	BURNER CONVECTION 061	1	1	1	_	_	_					C-3054
21	12039556	QUEMADOR CONVECCION 101	BURNER CONVECTION 101	_	_	_	1	1	1					C-3054
22	12039685	DETECTOR CONVECCION 061	CONVECTION DETECTOR 061	1	1	1	1	1	1					C-3054
1	12048798	REP VARIADOR REGULADO ADV	REGULATED VARIATOR ADV	1	1	1	1	1	1					C-3055
2	12024642	CONJUN. TERMOPAR CAMARA (Tn)	CHAMBER THERMOCOUPLE (Tn)	1	1	1	1	1	1					C-3055
6	12039548	SONDA PINCHO ADVANCE	ADVANCE PROBE PINCHO	1	1	1	1	1	1					C-3055
9	12024591	TERMOSTATO LIMITADOR 10/21	LIMITER THERMOSTAT10/21	1	1	1	1	1	1					C-3055
10	12024884	TERMOSTATO LIMITADOR CORTE	THERMOSTAT LIMITER	_	1	1	_	1	1					C-3055
13	12049846	VENTILADOR 230V.50-60HZ 53W	FAN 230V 50/60HZ 53W	2	2	2	2	2	2					C-3055
16	12041634	CONJUN.TERMOPAR VAPOR (Tv)	STEAM THERMOCOUPLE UNIT (Tv)	1	1	_	1	1	_					C-3055
16	12044609	CONJUNTO TERMOPAR L425 (Tv)	THERMOCOUPLE UNIT L425 (Tv)	_	_	1	_	_	1					C-3055
18	12025135	CONDENSADOR 3 µF	CONDENSER 3 µF	_	_	1	_	_	1					C-3055
19	12024173	TRANSFORMADOR 12-0-12-0,24-0	TRANSFORMER 12-0-12-0,24-0	1	1	1	1	1	1					C-3055

MOD.	HORNOS / OVEN	ZONA / ZONE	REPUESTOS RECOMENDADOS RECOMMENDED SPARE PART	PLANO DIAGRAM	

ITEM	CODIGO REFERENCE	DENOMINACION	DENOMINATION	AIC0076/F		AIC0038/F	AIC0077/F		AIC0040/F			ELIMINADO ELIMINATED	INTRODUCID. INTRODUCED	NOTAS
1	12130677	TARJETA GAS GRABADA LAVADO	RECORDED GAS C. BOARD WASH	1	_	_	1	_	_					C-3056
2	12130672	TARJETA CAMARA GRAB. LAVADO	RECORD. CHAMBER CARD WASH	1	_	_	1	_	_					C-3056
3	12130674	TARJ. PORTAM. GRABADA LAVADO	REC. COTRL PANEL CARD WASH	1	_	_	1	_	_					C-3056
6	12129318	SERIGRAFIA ACE-ACG	ACE-ACG SERIGRAPHY	1	_	_	1	_	_					C-3056
1	12130677	TARJETA GAS GRABADA LAVADO	RECORDED GAS C. BOARD WASH	_	1	_	_	1	_					C-3057
2	12130672	TARJETA CAMARA GRAB. LAVADO	RECORD. CHAMBER CARD WASH	_	1	_	_	1	_					C-3057
3	12130675	REP PORTAM. ADVANCE LAVADO	RECORD. C. PANEL CARD WASH	_	1	_	_	1	_					C-3057
4	12046670	CONTROL TARJETA CALD. 12V AC 50/6	CARD CONTROL 12V AC 50/60Hz	_	1	_	_	1	_					C-3057
6	12043405	ENCODER GAMA ADVANCE	ADVANCE RANGE ENCODER	_	1	_	_	1	_					C-3057
8	12129465	SERIGRAFIA ADVANCE LAVADO	ADVANCE SERIGRAPHY WASHING	_	1	_	_	1	_					C-3057
1	12041815	JUNTA PORTAMANDOS ADV PLUS	CONTROL PANEL SEAL ADV PLUS	1	1	1	1	1	1					C-3058
3	12046670	CONTROL TARJETA CALD. 12V AC 50/6	CARD CONTROL 12V AC 50/60Hz	_	_	1	_	_	1					C-3058
4	12121349	PLAT ADV PLUS CON SOFTWARE	ADV PLUS SOFTWARE PLATF.	_	_	1	_	_	1					C-3058
5	12130672	TARJETA CAMARA GRAB. LAVADO	RECORD. CHAMBER CARD WASH	_	_	1	_	_	1					C-3058
6	12130677	TARJETA GAS GRABADA LAVADO	RECORDED GAS C. BOARD WASH	_	_	1	_	_	1					C-3058

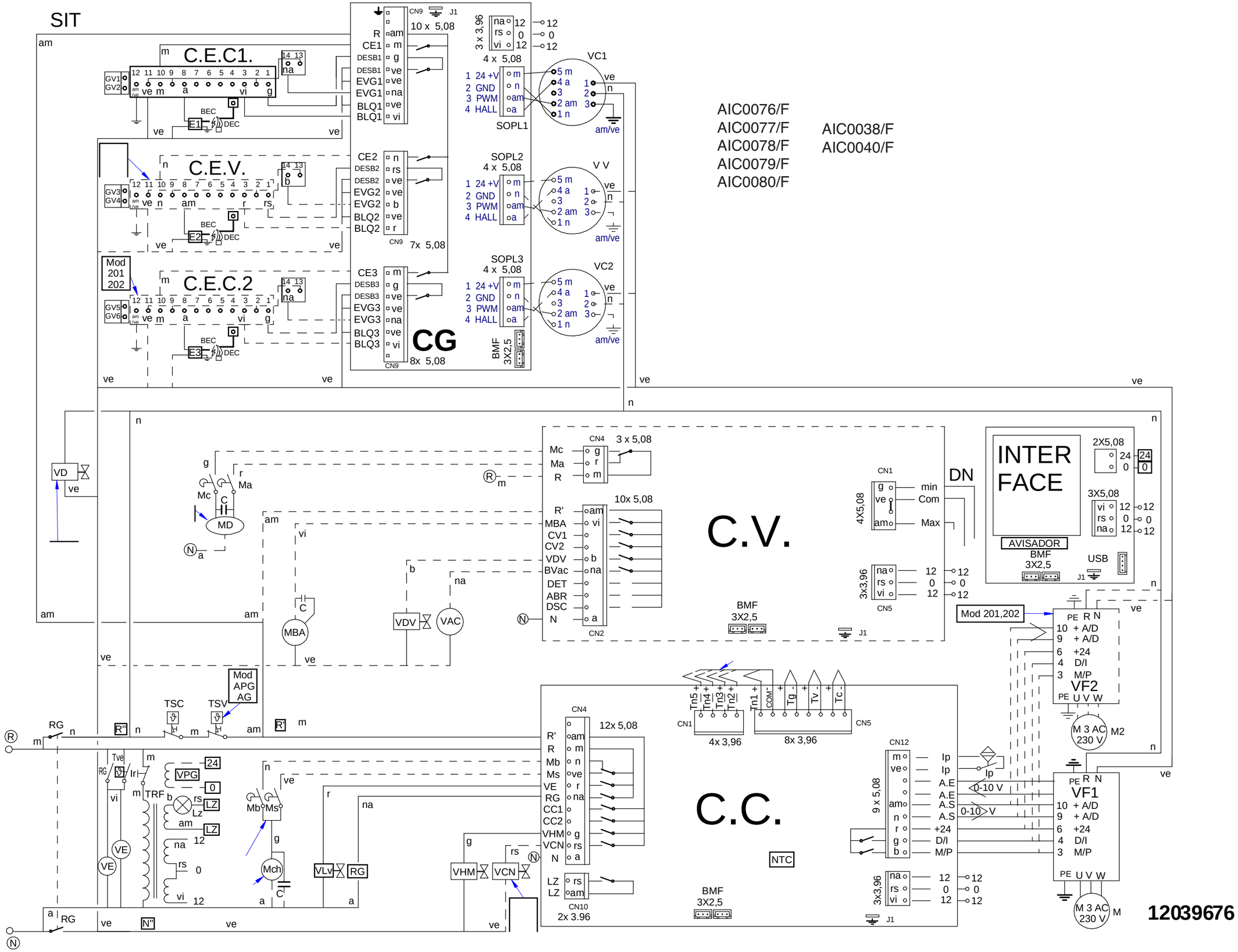
SIT
C.E.C1.
C.E.V.
C.E.C.2
Mod 201 202
CG
CN9
J1
10 x 5,08
7x 5,08
8x 5,08
3 x 3,96
4 x 5,08
SOPL1
SOPL2
SOPL3
VC1
VC2
V V
BMF 3X2,5
AIC0076/F
AIC0077/F
AIC0078/F
AIC0079/F
AIC0080/F
AIC0038/F
AIC0040/F
C.V.
CN4
3 x 5,08
10x 5,08
CN2
CN1
4X5,08
CN5
DN
INTER FACE
AVISADOR
2X5,08
3X5,08
USB
Mod 201,202
VF2
VF1
M 3 AC 230 V
M2
M
Mod APG AG
TSC
TSV
RG
VD
MD
MBA
VDV
VAC
VPG
TRF
VE
Mch
VLv
VHM
VCN
C.C.
12x 5,08
CN10
2x 3.96
4x 3,96
8x 3,96
9 x 5,08
NTC
12039676

12039293

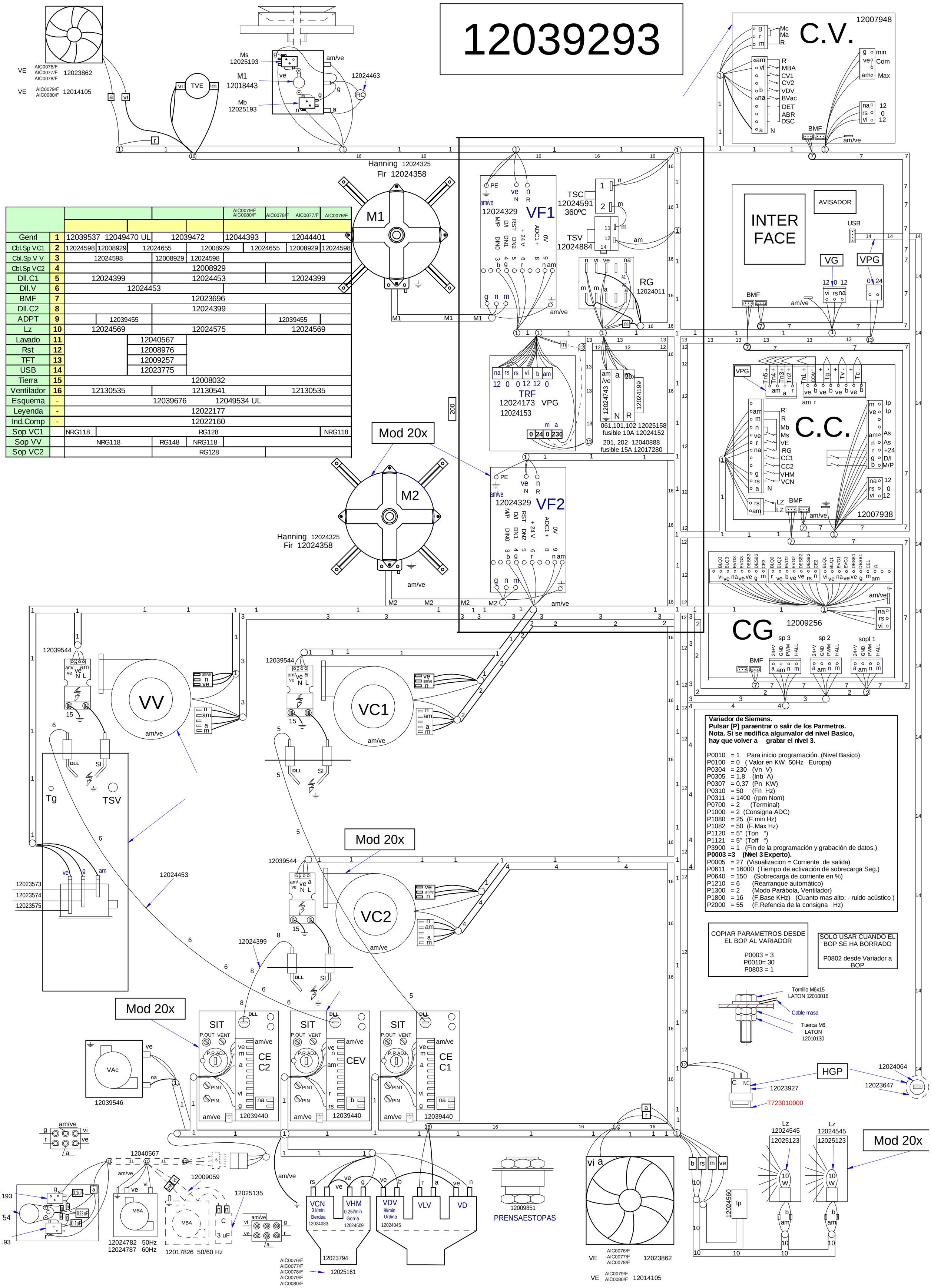

					AIC0079/F AIC0080/F	AIC0078/F	AIC0077/F	AIC0076/F
Genrl	1	12039537 12049470 UL		12039472	12044393	12044401		
Cbl.Sp VC1	2	12024598	12008929	12024655	12008929	12024655	12008929	12024598
Cbl.Sp V V	3	12024598		12008929	12024598			
Cbl.Sp VC2	4			12008929				
Dll.C1	5	12024399		12024453		12024399		
Dll.V	6	12024453						
BMF	7	12023696						
Dll.C2	8			12024399				
ADPT	9		12039455			12039455		
Lz	10	12024569		12024575		12024569		
Lavado	11		12040567					
Rst	12		12008976					
TFT	13		12009257					
USB	14		12023775					
Tierra	15	12008032						
Ventilador	16	12130535		12130541		12130535		
Esquema	-	12039676 12049534 UL						
Leyenda	-	12022177						
Ind.Comp	-	12022160						
Sop VC1		NRG118	RG128					NRG118
Sop VV		NRG118		RG148	NRG118			
Sop VC2				RG128				

Variador de Siemens.
Pulsar [P] paraentrar o salir de los Parmetros.
Nota. Si se modifica algunvalor del nivel Basico,
hay que volver a grabar el nivel 3.

P0010 = 1 Para inicio programación. (Nivel Basico)
P0100 = 0 (Valor en KW 50Hz Europa)
P0304 = 230 (Vn V)
P0305 = 1,8 (Inb A)
P0307 = 0,37 (Pn KW)
P0310 = 50 (Fn Hz)
P0311 = 1400 (rpm Nom)
P0700 = 2 (Terminal)
P1000 = 2 (Consigna ADC)
P1080 = 25 (F.min Hz)
P1082 = 50 (F.Max Hz)
P1120 = 5" (Ton ")
P1121 = 5" (Toff ")
P3900 = 1 (Fin de la programación y grabación de datos.)
P0003 =3 (Nivel 3 Experto).
P0005 = 27 (Visualizacion = Corriente de salida)
P0611 = 16000 (Tiempo de activación de sobrecarga Seg.)
P0640 = 150 (Sobrecarga de corriente en %)
P1210 = 6 (Rearranque automático)
P1300 = 2 (Modo Parábola, Ventilador)
P1800 = 16 (F.Base KHz) (Cuanto mas alto: - ruido acústico)
P2000 = 55 (F.Refencia de la consigna Hz)

COPIAR PARAMETROS DESDE EL BOP AL VARIADOR

P0003 = 3
P0010= 30
P0803 = 1

SOLO USAR CUANDO EL BOP SE HA BORRADO

P0802 desde Variador a BOP

	ESPAÑOL	FRANÇAIS	ENGLISH	DEUTSCH	ITALIANO
BEC	Bujía Encendido Cámara	Bougie Allumage Chambre	Chamber Spark Plug	Zündkerze Einschalten Garraum	Candela di Accensione Camera
BEV	Bujía Encendido Caldera	Bougie Allumage Chaudière	Boiler Spark Plug	Zündkerze Einschalten Boile	Candela di Accensione Caldaia
C.C.	Control Camara	Contrôle Chambre	Chamber Control	Steuerung Garraum	Controllo Camera
C.E.C	Control Combustión Cámara	Contrôle Combustion Chambre	Chamber Combustion Control	Steuerung Verbrennung Garraum	Controllo Combustione Camera
C.E.V	Control Combustión Caldera	Contrôle Combustion Chaudière	Boiler Combustion Control	Steuerung Verbrennung Boiler	Controllo Combustione Caldaia
C.G.	Control Gas	Contrôle Gaz	Control Gas	Steuern Sie Gas	Controlli il gas
C.V.	Control Caldera	Contrôle Chaudière	Boiler Control	Steuerung Boiler	Controllo Caldaia
CC1, CC2	Contactor Resistencia Cámara	Contacteur Élément Chauffant Chambre	Chamber Heating Element Contactor	Schütz Heizwiderstand Garraum	Contattore Resistenza Camera
CK1, CK2	Contactor General Calentamiento	Relais Élément Chauffant	Heating Element Relay	Relais Heizwiderstand	Relè Resistenza
CV1, CV2	Contactor Resistencias Caldera	Contacteur Élément Chauffant Chaudière	Boiler Heating Element Contactor	Schütz Heizwiderstand Boiler	Contattore Resistenza Caldaia
DEC	Detector Llama Cámara	Détecteur Flamme Chambre	Chamber Flame Detector	Flammendetektor Garraum	Rilevatore di Fiamma Camera
DEV	Detector Llama Caldera	Détecteur Flamme Chaudière	Boiler Flame Detector	Flammendetektor Boiler	Rilevatore di Fiamma Caldaia
DN	Detector Nivel Caldera	Détecteur Niveau Chaudière	Boiler Level Detector	Pegeldetektor Boiler	Rilevatore Livello Caldaia
F	Fusibles	Fusibles	Fuses	Sicherungen	Fusibili
FI	Filtro Interferencias	Filtre Interférences	Interference Filter	Störungsfilter	Filtro Interferenze
FM	Térmico Motor	Thermique Moteur	Thermal Engine	Thermoschalter Motor	Termico Motore
GV1, GV2	Electro válvula Gas Cámara	Électrovanne Gaz Chambre	Chamber Gas Solenoid Valve	Elektroventil Gas Garraum	Elettrovalvola Gas Camera
GV3, GV4	Electro válvula Gas Caldera	Électrovanne Gaz Chaudière	Boiler Gas Solenoid Valve	Elektroventil Gas Boiler	Elettrovalvola Gas Caldaia
Ip	Interruptor Seguridad Puerta	Interrupteur Sécurité Porte	Door Safety Switch	Sicherheitsschalter Tür	Iterruttore Sicurezza Porta
Lz	Luz Interior	Éclairage Intérieur	Inner Light	Innenbeleuchtung	Luce Interna
M, M2	Motor Turbina	Moteur Turbine	Turbine Engine	Motor Turbine	Motore Turbina
Ma	Interruptor Micro Abierto	Microrupteur Ouvert	Open Microswitch	Mikroschalter Geöffnet	Iterruttore Micro Aperto
Mb	Interruptor Micro Bajada	Microrupteur Descente	Drop Microswitch	Mikroschalter Senken	Iterruttore Micro Discesa
Mc	Interruptor Micro Cerrado	Microrupteur Fermé	Closed Microswitch	Mikroschalter Geschlossen	Iterruttore Micro Chiuso
Mch	Motor Chimenea	Moteur Cheminée	Stack Engine	Motor Abluftkamin	Motore Canna
MD	Motor Desague	Moteur évacuation	Drain Engine	Motor Abfluss	Motore scolo
Ms	Interruptor Micro Subida	Microrupteur Montée	Rise Microswitch	Mikroschalter Heben	Iterruttore Micro Salita
PF	Potenciómetro Selector Funciones	Potentiomètre Sélecteur Fonctions	Functions Selector Potentiometer	Potentiometer Funktionswahlschalter	Potenziometro Selettore Funzioni
RC	Resistencias Cámara	Éléments Chauffants Chambre	Chamber Heating Element	Heizwiderstände Garraum	Resistenze Camere
RG	Rele General	Relais Général	Main Relay	Hauptrelais	Relè principale
RV	Resistencias Caldera	Éléments Chauffants Chaudière	Boiler Heating Element	Heizwiderstände Boiler	Resistenze Caldaia
Tc	Sonda Cámara	Sonde Chambre	Chamber Probe	Sonde Garraum	Sonda Camera
TCN	Termostato Condensación	Thermostat Condensation	Condensation Thermostat	Thermostat Kondensierung	Termostato Condensazione
Tg	Sonda Caldera	Sonde Chaudière	Boiler Probe	Sonde Boiler	Sonda Caldaia
Tn	Sonda Núcleo	Sonde Noyau	Core Probe	Kerntemperaturmessonde	Sonda Nucleo
TRF	Transformador	Transformateur	Transformer	Transformator	Trasformatore
TSC	Termostato Seguridad Cámara	Thermostat Sécurité Chambre	Chamber Safety Thermostat	Sicherheitsthermostat Garraum	Termostato Sicurezza Camera
TSV	Termostato Seguridad Caldera	Thermostat Sécurité Chaudière	Boiler Safety Thermostat	Sicherheitsthermostat Boiler	Termostato Sicurezza Caldaia
Tv	Sonda Vapor	Sonde Vapeur	Steam Probe	Sonde Dampf	Sonda Vapore
VAC	Bomba Vaciado	Pompe Vidange	Vacuum Pump	Ablasspumpe	Pompa scarico
MBA	Moto Bomba Aclarado	Pompe Rinçage	Rinsing Pump	Pumpe Ausspülen	Pompa Risciacquo
VC1, VC2	Ventilador Soplante Camara	Ventilateur Soufflant	Blowing Fan	Ventilator Gebläse	Ventilatore Soffiante
VCN	Electro válvula Condensación	Électrovanne Condensation	Condensation Solenoid Valve	Elektroventil Kondensierung	Elettrovalvola Condensazione
VDV	Electro válvula Llenado Caldera	Électrovanne Remplissage Chaudière	Chamber Filling Solenoid Valve	Elektroventil Füllung Boiler	Elettrovalvola di Riempimento Caldaia
VE	Ventilador Cuadro Eléctrico	Ventilateur Tableau Électrique	Fan Switchboard	Ventilator Elektrotafel	Ventilatore Quadro Elettrico
VF1,VF2	Variador de Frecuencia	Variateur Vitesse	Speed Variator	Geschwindigkeitsregler	Variatore di Velocità
VHM	Electro válvula Humidificador	Électrovanne Humidificateur	Humidifier Solenoid Valve	Elektroventil Befeuchtungsvorrichtung	Elettrovalvola Umidificatore
Vv	Ventilador Soplante Caldera	Ventilateur soufflement chaudière	Boiler Blowing Fan	Durchbrennenventilator zum Dampfkessel	Ventilatore Soffiante caldaia
	COLORES	**COULEURS**	**COLOUR**	**FARBEN**	**COLORE**
a	Azul	Bleu	Blue	Blau	Blu
am	Amarillo	Jaune	Yellow	Gelb	Giallo
am/ve	Amarillo/verde	Jaune / vert	Yellow / green	Gelb/grün	Giallo/verde
b	Blanco	Blanc	White	Weiß	Bianco
g	Gris	Gris	Grey	Grau	Grigio
m	Marrón	Marron	Brown	Braun	Marrone
n	Negro	Noir	Black	Schwarz	Nero
na	Naranja	Orange	Orange	Orange	Arancio
r	Rojo	Rouge	Red	Rot	Rosso
rs	Rosa	Rose	Pink	Rosa	Roseo
ve	Verde	Vert	Green	Grün	Verde
vi	Violeta	Violet	Purple	Violett	Viola
					T303042000