TUNED FOR YOUR SOUL

www.dragsteraudio.it

OWNER'S MANUEL

# DAD-1100.1
# DAD-1600.1
# DAD-160.4
# DAD-220.4
# DAD-320.4
# DAD-360.4

CLASS D AMPLIFIER

CE

# INTRODUCTION

Thank you for purchasing our car audio amplifier. These power amplifier has been designed to provide high quality performance with minimum maintenance. However, it's performance will only be as good as the care and quality of components with which is installed. We therefore advise that you read these instructions very carefully to familiarize yourself with the product and it's features.

Before installing the power amplifier please read this instruction manual carefully.The instructions for mounting and connecting the set have to be followed precisely. If necessary, a service center should be consulted.

All connection for DC power, signal input and speaker outputs can be carried out easily and safely by way of RCA and screwed terminals.

# INSTALLATION INSTRUCTIONS

Please choose a mounting place without any direct weather influences. Note that the amplifier generates heat so that a well ventilated place is necessary.
According to your car's construction the set can be made very carefully in order to ensure the amplifier's full performance and reliability.

Keep the wire connections as short as possible with sufficient length in order to minimize power losses and provide a higher audio output of the system.

For safety reasons route all power and speaker wiring by using the exiting wire channels.

To minimize damage to the cables, take care that they do not pass sharp edged metal.

Lay all cables as far away as possible from the ignition cables, modules in the boot and under the key dashboard, as these create interference.

Add a fuse into the (+) power cable in a distance of not more than 30cm from the positive battery pole.
Keep the length of the power wires as short as possible . It is better to use power cables which are short and then longer speaker cables.
In order to reduce interference , please pay attention to the wiring instructions.



www.dragsteraudio.it

# SPECIFICATION

| MODEL | **DAD-1100.1** | **DAD-1600.1** |
|---|---|---|
| Supply Voltage | 9~16V DC | 9~16V DC |
| Power Output 4 Ohm | 300W X 1 | 400W X 1 |
| Power Output 2 Ohm | 550W X 1 | 800W X 1 |
| Power Output 1 Ohm | 1100W X 1 | 1600W X 1 |
| Frequency Response | 15Hz~300Hz(-3dB) | 15Hz~300Hz(-3dB) |
| Signal Noise Ratio | >90dB | >90dB |
| Input Impedance | 20K Ohm | 20K Ohm |
| Input Sensitivity | 6V-0.25V | 6V-0.25V |
| T.H.D. | <0.1% | <0.1% |
| HighPass Freq. | 15-55Hz | 15-55Hz |
| Low Pass Freq. | 55-300Hz | 55-300Hz |
| Bass Boost | 0-12dB | 0-12dB |
| Power Terminal | 4GA | 4GA |
| Speaker Terminal | 16GA | 16GA |
| Dimensions | 216x145x50mm | 251x145x50mm |

| **MODEL** | **DAD-160.4** | **DAD-220.4** |
|---|---|---|
| Supply Voltage | 9~16V DC | 9~16V DC |
| Power Output @ 4 Ohm | 160W x 4 | 220W x 4 |
| Power Output @ 2 Ohm | 240W x 4 | 300W x 4 |
| Bridge Output @ 4 Ohm | 400W x 2 | 500W x 2 |
| Frequency Response | 15Hz~20KHz(-3dB) | 15Hz~20KHz(-3dB) |
| Signal Noise Ratio | >90dB | >90dB |
| Input Impedance | 20K Ohm | 20K Ohm |
| Input Sensitivity | 6V-0.25V | 6V-0.25V |
| T.H.D. | <0.1% | <0.1% |
| Hi pass Freq. | 40Hz-2KHz | 40Hz-2KHz |
| Low pass Freq. | 40Hz-2KHz | 40Hz-2KHz |
| Power Terminal | 4GA | 4GA |
| Speaker Terminal | 16GA | 16GA |
| Dimensions | 211x145x50mm | 232x145x50mm |

| **MODEL** | **DAD-320.4** | **DAD-360.4** |
|---|---|---|
| Supply Voltage | 9~16V DC | 9~16V DC |
| Power Output @ 4 Ohm | 320W x 4 | 360W x 4 |
| Power Output @ 2 Ohm | 450W x 4 | 500W x 4 |
| Bridge Output @ 4 Ohm | 750W x 2 | 850W x 2 |
| Frequency Response | 15Hz~20KHz(-3dB) | 15Hz~20KHz(-3dB) |
| Signal Noise Ratio | >90dB | >90dB |
| Input Impedance | 20K Ohm | 20K Ohm |
| Input Sensitivity | 6V-0.25V | 6V-0.25V |
| T.H.D. | <0.1% | <0.1% |
| Hi pass Freq. | 40Hz-2KHz | 40Hz-2KHz |
| Low pass Freq. | 40Hz-2KHz | 40Hz-2KHz |
| Power Terminal | 4GA | 4GA |
| Speaker Terminal | 16GA | 16GA |
| Dimensions | 266x145x50mm | 266x145x50mm |

# INTERFERENCE

All cables are sources of interference. The power cable and RCA audio cable are very prone to interference; the remote cables are less prone . There is often interference caused by the generator (piping), ignition ( cracking ) or other car electronic parts. Most of these problems can be eliminated by correct and careful cabling. In doing so, these are the following guidelines :

- Use only a screened audio cable for the wiring between "low level in " of the amplifier and RCA or DIN output of the radio .
- Lay the signal, speaker and power cables separately with enough distance from one another and also from each other car cable. If not possible, you can lay the circuit and ground cable together with the serial cables. Audio and speaker cable should be as far away from these as possible.
  The REM cable to the automatic antenna output of the radio can be laid together with the signal cables.
- Avoid ground loops by laying the ground wiring of all components to a center point in a star-like way. You can find the best central point in measuring the voltage directly at the battery. Now compare this voltage value with the chosen ground point and the (+) terminal of the amplifier. If the measured voltage in only less different, you've found the correct control. Other wise you have to look for another point. You should measure with the ignition being switched on and additionally switched on other electronics ( rear window heating and light ).
- If there are pickups from external electrical sources into the speaker cables, divide the core leads and twist them together.
- If there are noises from the car electronics. Add an interference suppression choke to the power wiring .
- If there are huming noises, use thicker ground cables or add further ground cables to the chassis.
- To reduce contact resistance and bad and loose contacts, please tin the cable ends or use multi core cable ends, spade terminals or others. Gold Plated spade terminal are free of corrosion and have the lowest contact resistance.
- Should all these measures to without any success. the use of a ground loop isolator may solve the problem.





# FEATURES

## DAD-1100.1/DAD-1600.1

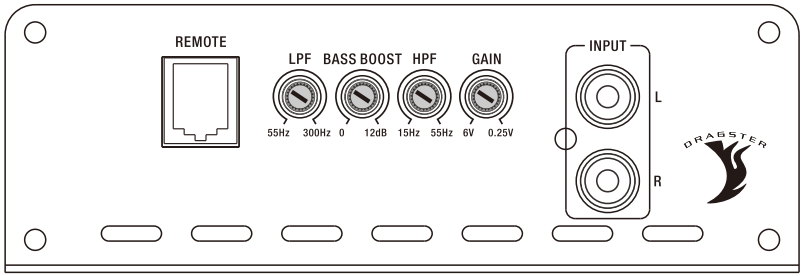


## DAD-160.4/DAD-220.4/DAD-320.4/DAD-360.4

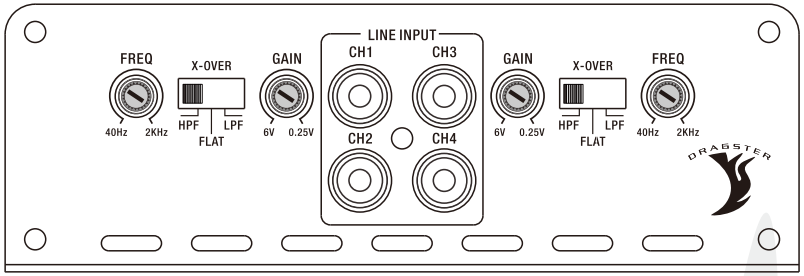


- Gain Control
- Low level input
- HPF/LPF Control
- Sub Sonic Control
- Thermal protection
- 1/4Channel power amplifier
- Bass Freq Control
- Filter Control
- Bass Boost Control
- Short circuit protection
- Remote Turn-on/Turn-off circuit
- LED Power and Protection Indicator

## PRECAUTIONS

- This unit is designed for negative ground 12V DC operation only.
- Use speakers with an impedance of 2 or 4 Ohms (2 to 4 Ohm when used as bridging amplifier )
- Avoid installing the unit where:
  -It would be subject to high temperatures, such as from direct sunlight or hot air from the heater.
- -It would be exposed to rain or moisture.
- -It would be subject to dust or dirt.
  If your car is parked in direct sunlight and there is a considerable rise in temperature inside the car, allow the unit to cool off before operation.
- When installing the unit horizontally, be sure not to cover the heatsink fins with the floor carpet.
- If this unit is placed too close to the car radio, an interference may occur. In this case, separate the amplifier from the car radio.
  This power amplifier employs a protection circuit to protect the transistors and speakers if the amplifier malfunctions. Do not attempt to test the protection circuits by covering the heatsink or connecting improper loads.
- Do not use the unit with a weak auto battery as its optimum performance depends on a normal battery supply voltage.
- For safety reasons, keep the volume of your car audio system moderate so that you can still hear normal traffic sounds outside your car.

## FUSE REPLACEMENT

If the fuse blows, check the power connection and replace the fuse. If the fuse blows again after replacement, there may be an internal malfunction. In this case, consult your dealer.

**WARNING:**
Use the specified amperage fuse. Use of a higher amperage fuse may cause serious damage.

**PROTECTION CIRCUIT:**
This amplifier is provided with a protection circuit which operates in the following cases when:

- The unit is overheated.
- The speaker terminals are short circuited.



www.dragsteraudio.it

## OPERATION

- **GND(-)=GROUND CONNECTION**
  Connect the GND terminal to the chassis ground of your car and take care of best electric and mechanic contact. In doing so, d rill a hole in to the car chassis near the amplifier then remove color, dirt or any other substance from the ground point.
  After that fasten the cable end with added ring terminal by using a screw. Ensure that the ground connection is as short as possible and that the cable diameter is sufficient ( min 4 mm" ). Route the ground cables from the radio and all other equipment parts. like equalizer. active crossover network or other amplifiers, to the same ground point.

- **+12V=POWER SUPPLY**
  Connect the +12V terminal to the positive pole of the battery with a lead cable and add a fuse in to the power cable in a distance of not more then 30 cm from the battery. The lead cables's diameter should be at least 4 mm' for a length of 3m and 6 mm" for a length of 6m.

- **REM(ON/OFF)REMOTE CONTROL**
  Connect the REM terminal to the automatic antenna connector of your car radio.
  Now when turning on and off your car radio. the amplifier automatically switches ON and OFF. A cable diameter of 0.5mm² is sufficient.

- **FUSE**
  The amplifier is equipped with a plug-in auto fuse protecting the set against fault conditions. Do not use a fuse with a higher value and never bridge the fuse over, as this may lead to irreparability damage so that ant any claim for warranty is denied.

## HOW TO PROCEED IN CASE OF FAULTS

- **No Function:**
  The connection cable is not connected correctly ( = terminal BATT/GND /REM).
  Ensure that all connections and mechanic contact and that the jacket has been removed.
  The fuse is defective-pay attention to the correct value of a new fuse!
- **No Sound:**
  Speaker cable or speaker plug are not connected correctly.
- **No Sound /Red LED Protection Shines:**
  The plus and minus wires of the speaker cable have contact, thus eliminate the short circuit. If you use a 2 Ohm speaker in stereo mode, a 4 Ohm speaker in bridge mode or tri-mode and the set is overloaded, then turn the gain control to "min "until the operation is free of trouble.
- **Poor Sound Quality ( Distortions ):**
  The speakers are overloaded, therefore turn down the volume level and check the volume control positions.
- **No Stereo Sound And A Weak Bass:**
  Speaker cables (+) and (-) are mixed up, unit wired out of phase.

## OPERATION

After the amplifier has been installed and all connections have been made careful -lyand securely, turn the radio on so that the amplifier is switched on automatically. After a short power-on period, the amplifier reaches its full performance.

Now turn up the volume slowly using the volume control of the radio. If there is no sound or only a distorted replay, switch off the radio immediately, the amplifier will also switch off automatically, and check if all connections have been made correctly.

- POWER=LED POWER INDICATOR

  After the orderly connection of the three power terminals, the LED indicator shines green and goes out with off.

- PROTECT =LED PROTECTION INDICATOR

  This set is equipped with an overload protection, immediately upon overloading due to short circuit or much increased temperature the overload protection is activated and the red LED indicator is shining. Through this the amplifier is protected against damage. In case of the thermal protection a certain short cooling time must be allowed after which the amplifier automatically resumes operation.

- LEVEL CONTROL

  The input level control allows the system to work well within a wide range of output level. Choose the adjustment in the way that you achieve a sound most possibly without any distortion. as a guideline the following procedure is recommended: If you use several amplifier, the adjustment has to be made for each set separately, tune up the volume of your car radio to 2/3 of the maximum volume.

  Now turn the gain control of the amplifier from " Min " to " Max " direction until you can hear distortions. Then turn the level control a little back to " Min ". The gain control adjustment is finished now.

  Attention ! If you use 2 Ohm speakers in stereo mode. Tri-mode or 4 Ohm speakers in bridge mode and the overload protection is triggered, turn the gain control to " Min " direction, until the operation is free of trouble.

- SUBWOOFER FREQUENCY

  In case subwoofer has been connected to the amplifier, this loudspeaker can be run through a low pass filter in an optimum frequency range. For this purpose low pass filter has be turned to 55Hz or 300Hz. In "off " position the low pass filter is not activated. The crossover frequency to be chosen in each case mainly depends on the cone size of the subwoofer. If this is 8"or 10", then use 300Hz. When the speaker have a size of 12" or 15", 50Hz is the better choice.

- HIGH PASS AND LOW PASS CONTROLS

  This amplifier has high pass and low pass controls for making good sound combination.



www.dragsteraudio.it

## WIRING INSTRUCTIONS

- **POWER CONNECTION**

  The battery terminal (+12V) must be connected directly to the positive terminal of the vehicle battery to provide an adequate voltage source and minimize noise. Connecting the battery terminal lead to any other point (such as the fuse block ) will reduce the power output and may cause noise and distortion. Use only #10 gauge or thicker (smaller gauge # ) wire for this lead and connect it to the terminal of the battery after all other wiring is completed.

- **GROUND CONNECTION**

  The ground terminal (GND) connection is also critical to the correct operation of the amplifier. Use a wire of the same gauge as the power connection ( #10 or thicker)and connect it between the ground terminal (GND ) of the amplifier and a metal part of the vehicle close to the mounting location. This wire should be as short as possible and any paint or rust at the grounding point should be scraped away to provide a clean metal surface to which the end of the ground wire can be screwed or bolted.

- **REMOTE TURN-ON CONNECTION**

  The amplifier is turned on by applying +12V to the remote turn-on terminal (REM). The wire lead to this terminal should be connected to the "Auto-Antenna " lead from the car stereo which will provide the +12V only when the car stereo is turned on. If the car stereo does not provide an Auto-Antenna" lead, the remote turn-on lead may be wired to an "Accessory " or "Radio "terminal in the car's fuse block. This will turn the amplifier on and off with the ignition key, regardless of whether the car stereo is on or off. The remote turn-on lead does not carry large currents. So #20 gauge wire may be used for this application.

- **SPEAKER CONNECTIONS**

  Depending on the type and number of speakers used with the amplifier, wire them to the speaker terminals as per the appropriate wiring diagram. For most applications #18gauge wire should be used for the speaker leads but in no case thinner than #20 gauge. For leads in excess of 10 feet # 16 gauge is recommended. When wiring the speakers, pay careful attention to the polarity of the terminals on the speakers and make certain they correspond to the polarity of the corresponding terminals on the amplifier. Do not ground any speaker leads to the chassis of the vehicle.

- **INPUT CONNECTIONS**

  This amplifier features low-level input capability.

  If the car stereo does not provide low-level outputs, the amplifier may be connec -ted via the speaker (high-level) outputs from the stereo with a line converter.

***Caution:*** *Use either the low-level or the high-level inputs on the amplifier. Do not use both input levels at the same time.*

## STEREO MODE

### DAD-1100.1/DAD-1600.1

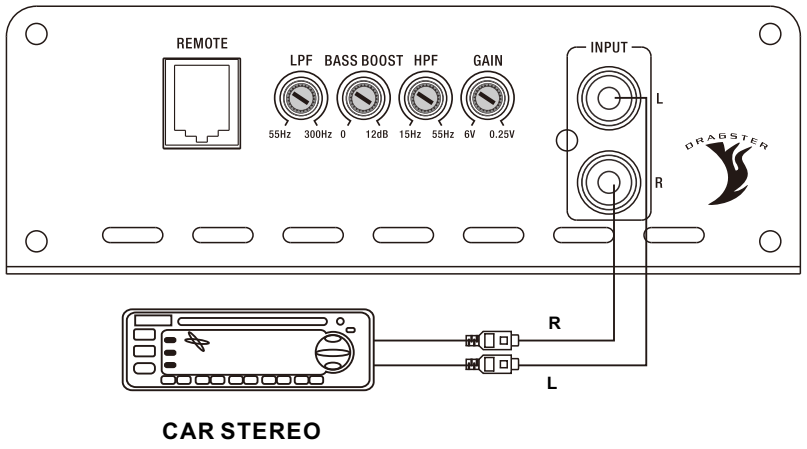


### DAD-160.4/DAD-220.4/DAD-320.4/DAD-360.4

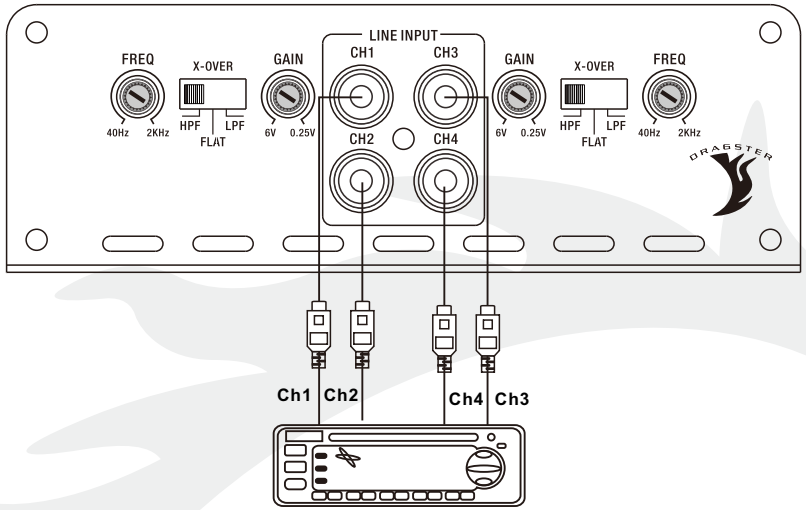






## POWER CONNECTION LEADS

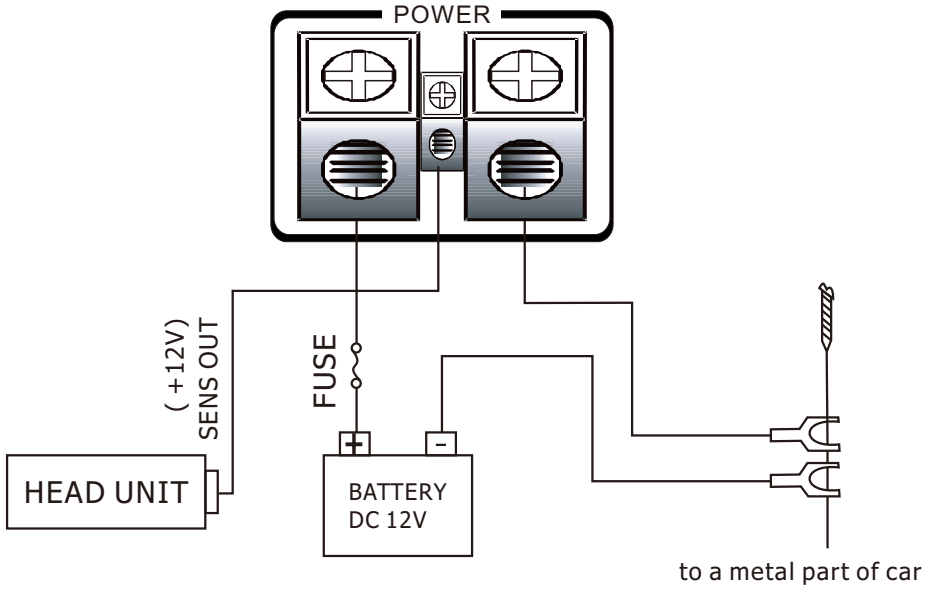


### *NOTES ON THE POWER SUPPLY :*

- Connect the +12V power input lead only after all other leads have been connected.
- Be sure to connect the ground wire of the unit securely to a metal part of the car. A lose connection may cause a malfunction of the amplifier.
- REM: The unit is turned on by applying +12 Volts to this terminal. This terminal does not draw heavy current like the Power Terminals so a thinner connecting wire is acceptable. Standard 18 GAUGE is fine and the standard color is yellow . If the radio is equipped with a Power Antenna control wire, it can drive this terminal . If the Power Antenna wire is already in use, you can still splice into it. With this method, the unit will turn on automatically with the radio.
- Use the power supply lead with a fuse attached whose value is the same as original fuse.
- Place the fuse in the power supply lead as close as possible to the car battery .
- During a full power operation, maximum current will run through the system Therefore, make sure that the leads to be connected to the +12V and GND terminals of the unit respectively must be larger than 10-Gauge ( AWG.10).

## BRIDGED MODE

### DAD-160.4/DAD-220.4/DAD-320.4/DAD-360.4

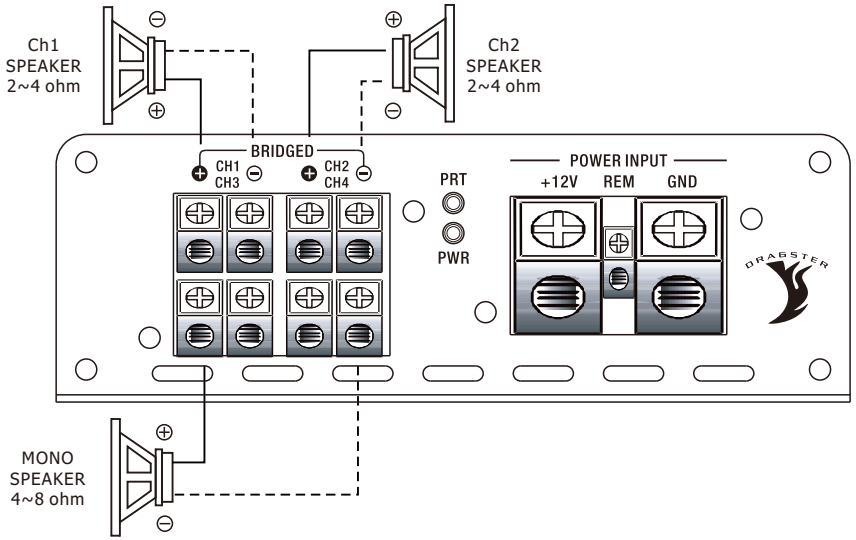


### DAD-160.4/DAD-220.4/DAD-320.4/DAD-360.4

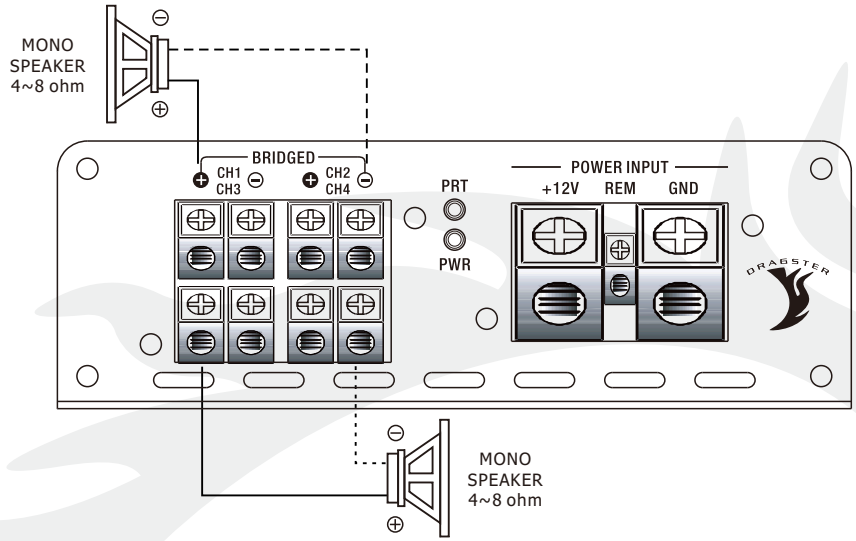






## SPEAKERS CONNECTIONS

### DAD-1100.1/DAD-1600.1

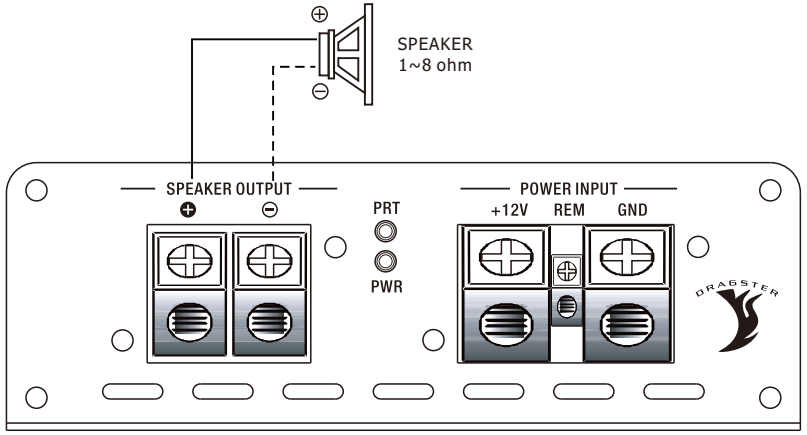


### DAD-160.4/DAD-220.4/DAD-320.4/DAD-360.4

