FITTING INSTRUCTIONS

Part Number: **5450110**

Product Description: UNDER VEHICLE PROTECTION (UVP) SET

Suited to vehicle/s: JEEP JK WRANGLER 2 AND 4 DOOR 2012/-

Please place these instructions in vehicle glovebox when complete.

WARNING

REGARDING VEHICLES EQUIPPED WITH SRS AIRBAG;

When installed in accordance with these instructions, the vehicle protection panels do not affect operation of the SRS airbag.

ALSO, NOTE THE FOLLOWING:

- This product must be installed exactly as per these instructions using only the hardware supplied.
- Do not use this product for any vehicle make or model, other than those specified by ARB.
- Do not remove labels (if any) from this product.
- This product or its fixing must not be modified in any way.
- The installation of this product may require the use of specialized tools and/or techniques
- These instructions are correct as at the publication date. ARB Corporation Ltd. cannot be held responsible for the impact of any changes subsequently made by the vehicle manufacturer
- During installation, it is the duty of the installer to check correct operation/clearances of all components
- Work safely at all times
- Unless otherwise instructed, tighten fasteners to specified torque

ARB 4x4 ACCESSORIES

Corporate Head Office

42-44 Garden St
Kilsyth, Victoria
AUSTRALIA 3137

Tel: +61 (3) 9761 6622
Fax: +61 (3) 9761 6807

Australian enquiries sales@arb.com.au
North & South American enquiries sales@arbusa.com
Other international enquiries exports@arb.com.au

www.arb.com.au

Copyright © 2005 by ARB Corporation Limited. All rights reserved, this document must not be reproduced without the express authority of ARB Corporation Ltd

IMPORTANT INFORMATION
GENERAL CARE AND MAINTENANCE

By choosing ARB vehicle protection, you have bought a product that is one of the most sought after 4WD products in the world. Your under vehicle protection panels are a properly engineered, reliable, quality accessory that represents excellent value.

- While these panels have been engineered for strength and functionality care and good judgment should be taken when traversing difficult off-road conditions to minimise damage to panels and vehicle.
- During servicing when panels are removed ensure fasteners are re-fitted to the correct torque values.
- Inspect panels visually on a regular basis. Dirt and foreign matter should be washed out to minimise build-up around hot components. Never remove foreign matter with hands while the vehicle is hot or running. Replace any components as necessary. This service can be performed by your local authorized ARB Stockist.

FITTING REQUIREMENTS

REQUIRED TOOLS FOR FITMENT OF PRODUCT:

BASIC TOOL KIT	

HAVE AVAILABLE THESE SAFETY ITEMS WHEN FITTING PRODUCT:

Protective eyewear		**Hearing protection**	

NOTE: 'WARNING' notes in the fitting procedure relate to OHS situations, where to avoid a potentially hazardous situation it is suggested that protective safety gear be worn or a safe work procedure be employed. If these notes and warnings are not heeded, injury may result.

FASTENER TORQUE SETTINGS:

SIZE	Torque Nm	Torque lbft
M6	9	7
M8	22	16
M10	44	32
M12	77	57

Copyright © 2005 by ARB Corporation Limited. All rights reserved, this document must not be reproduced without the express authority of ARB Corporation Ltd

FITTING KIT COMPONENTS

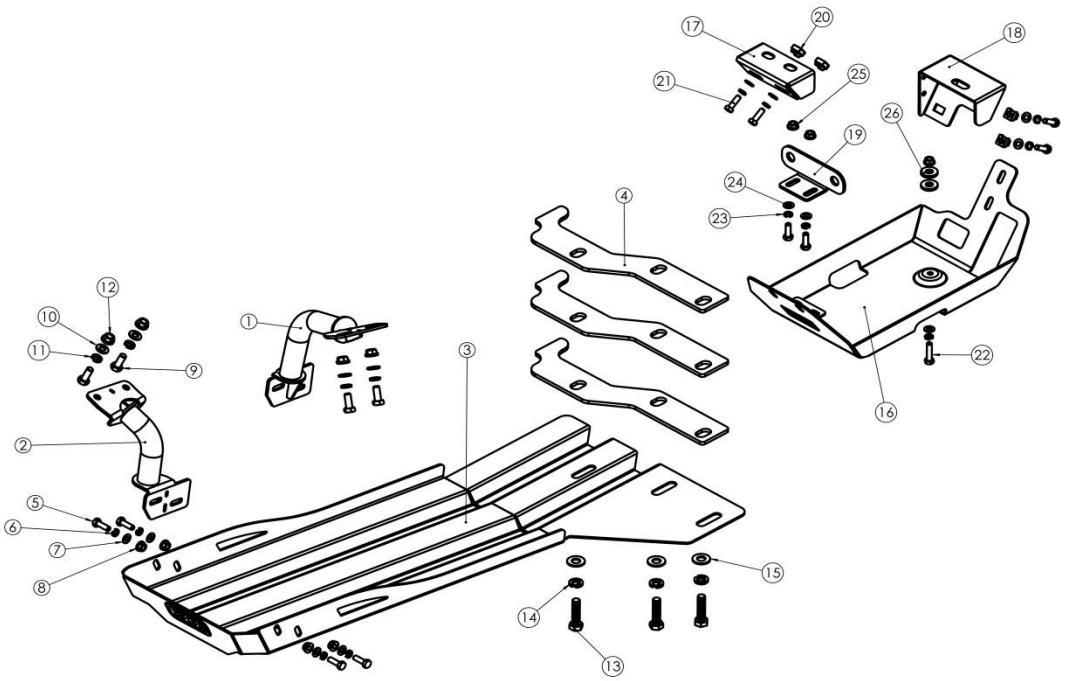

PARTS LISTING				
ITEM #	APPLICATION	PART #	QTY.	DESCRIPTION
1	FIT FRONT PANEL	3759143	1	LH BRACE ASSY.
2		3759141	1	RH BRACE ASSY.
3		3759144	1	FRONT UVP PANEL ASSEMBLY
4		3194526	3	PACKER 6 MM AL. FRONT PANEL
5		6151022	4	BOLT M8 X 1.25 X 25 ZP
6		4581046	4	WASHER SPRING M8 ZP
7		4581044	4	WASHER FLAT M8 ZP.
8		6151132	4	NUT FLANGE M8 X 1.25 ZP
9		6151320	4	BOLT M10 X 1.5 X 25
10		4581083	4	WASHER FLAT M10 X 21 X 2
11		4581048	4	WASHER SPRING M10
12		6151321	4	NUT FLANGE M10 X 1.5 ZP
13		6151148	3	BOLT M12 X 1.5 X 50
14		4581050	3	WASHER SPRING M12
15		4581049	3	WASHER FLAT M12
16	FIT CANISTER PANEL	6522913	1	CANISTER UVP PANEL
17		3759145	1	FRONT CANISTER MOUNT
18		3758940	1	REAR CANISTER MOUNT
19		3759147	1	BRACKET REAR CANISTER SUPPORT
20		6151303	4	NUT CAGE M8
21		6151022	6	BOLT M8 X 25
22		6151083	1	BOLT M8 X 35
23		4581046	7	WASHER SPRING M8
24		4581044	7	WASHER FLAT M8
25		6151132	3	NUT FLANGE M8
26		4581011	2	SPACER WASHER FLAT M12 X 27 X 4

Copyright © 2005 by ARB Corporation Limited. All rights reserved, this document must not be reproduced without the express authority of ARB Corporation Ltd

FITTING PROCEDURE

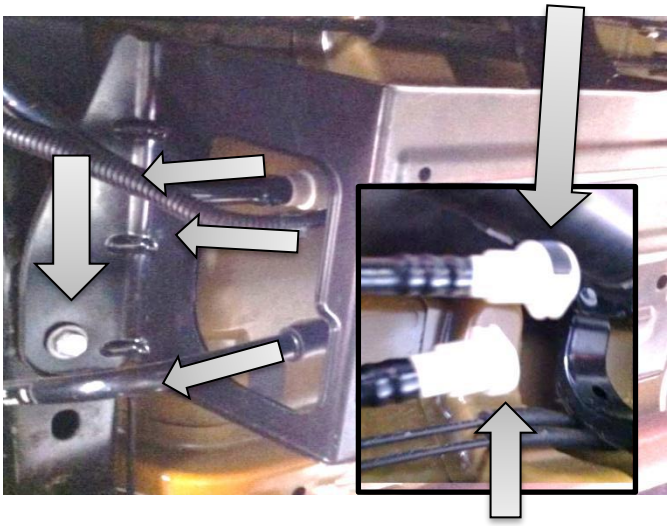

1. Remove the three hoses from the charcoal canister (rear LH side of vehicle) by pushing the tabs marked and removing to the rear of the vehicle.

   HINT: It may be necessary to push and hold the tab while pushing the hoses forward before removing.

2. Remove the third hose by pulling backwards off the canister barb.
3. Remove and retain the rear bolt securing the canister to the underside of the vehicle.

4. Remove and discard the bolt retaining the rear of the canister. Carefully remove and retain the canister.

5. Remove and retain the remaining two bolts securing the front of the canister bracket.

   Discard the canister bracket.

Copyright © 2005 by ARB Corporation Limited. All rights reserved, this document must not be reproduced without the express authority of ARB Corporation Ltd

FITTING PROCEDURE

6. Place M8 cage nuts on the inside of the canister brackets as shown. Attach to vehicle using factory hardware as shown.

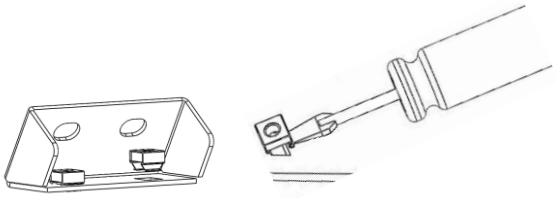

7. Torque bolts to vehicle manufactures specification.

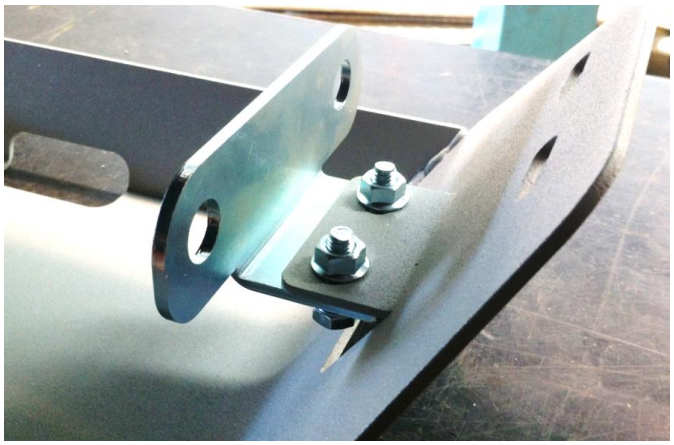

8. Install canister bracket to canister panel using M8 x 25 mm bolts, flat and spring washers, as shown, finger tight only.

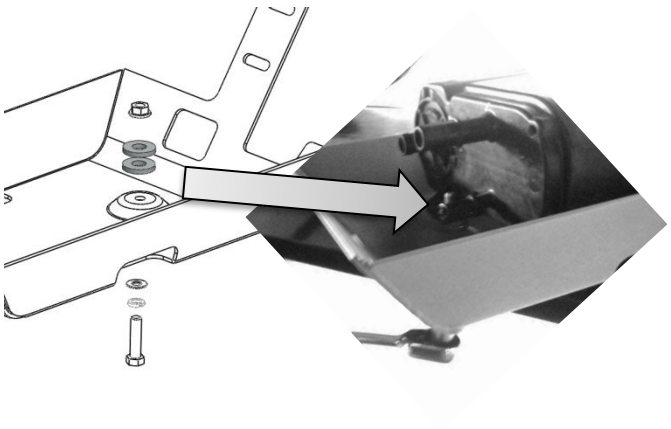

9. Insert two M12 x 27 x 4 mm flat washers between the canister and the panel as shown.

10. Place an M8 flange nut on to the canister tab and fasten using M8 x 35 mm bolt, flat and spring washer as shown.

    Torque to specification.

    M8 - **22 Nm.**

Copyright © 2005 by ARB Corporation Limited. All rights reserved, this document must not be reproduced without the express authority of ARB Corporation Ltd

FITTING PROCEDURE

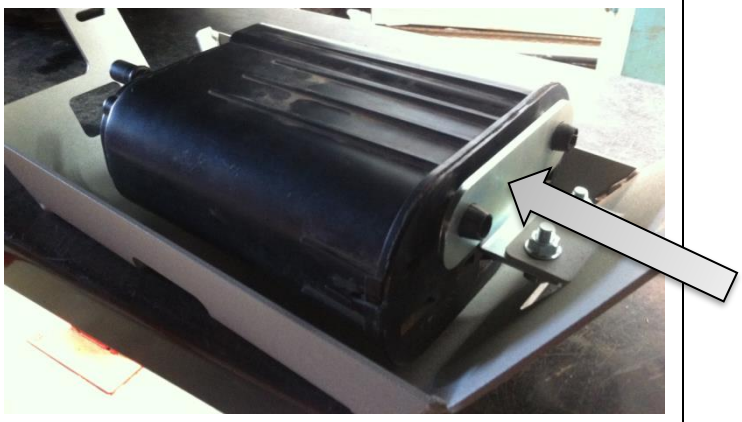

11. While firmly pushing the rear canister bracket on to the canisters plugs in the direction shown, tighten the M8 bolts fitted previously.

    Torque to specification.

    M8 - **22 Nm**

12. Lift canister panel into position and secure using four M8 x 25 mm bolts, spring and flat washers.
13. Adjust canister panel away from tail shaft keeping a minimum distance of 20 mm from the exhaust.

    Note: On short wheel base models, it may be necessary to adjust the canister bracket further towards the tail shaft to avoid the rear muffler.

    Torque to specification.

    M8 - **22 Nm.**

14. Replace canister hoses as shown. Check clips have secured correctly by gently pulling hoses towards rear of vehicle.

Important: Ensure all hoses do not contact the canister panel. Adjust canister as required.

Hint: Spacers can be removed if required to increase height adjustment.

Canister fitment complete.

Copyright © 2005 by ARB Corporation Limited. All rights reserved, this document must not be reproduced without the express authority of ARB Corporation Ltd

FITTING PROCEDURE

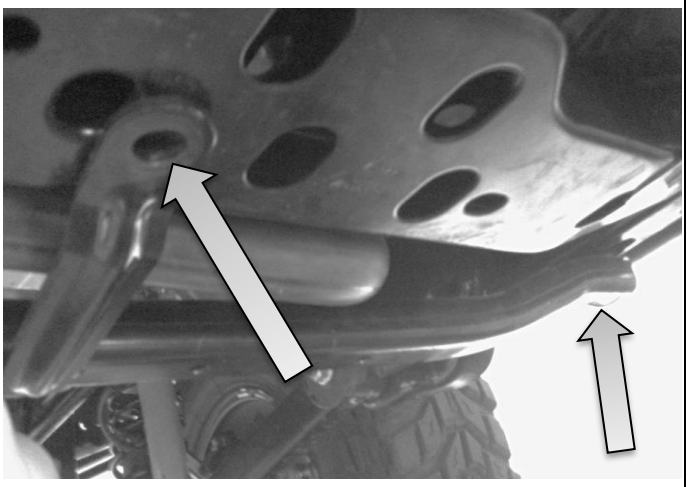

15. If vehicle is equipped with a manual transmission, proceed to the following step.

    For vehicles equipped with an automatic transmission, remove the three bolts retaining the front cross member as shown.

    Note: LHS bolt not shown.

    Refit the two side bolts, discard the centre bolt and cross member.

    Torque the M12 bolts to manufacturer's specification.

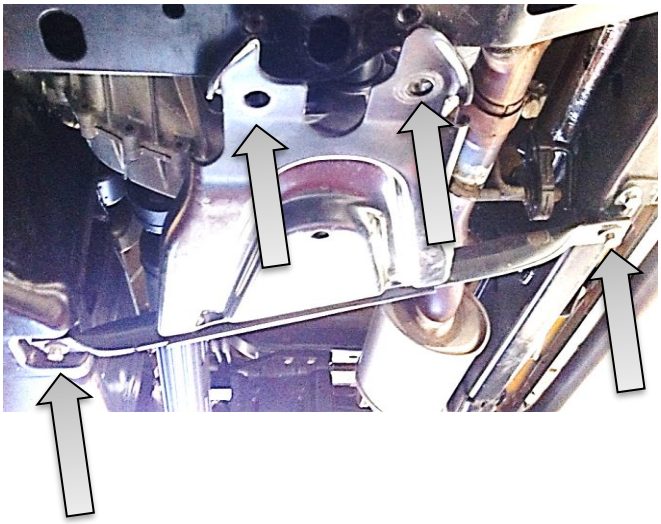

16. Remove and discard the two front bolts from transfer case guard shown
17. Loosen off two rear bolts from transfer case guard shown.

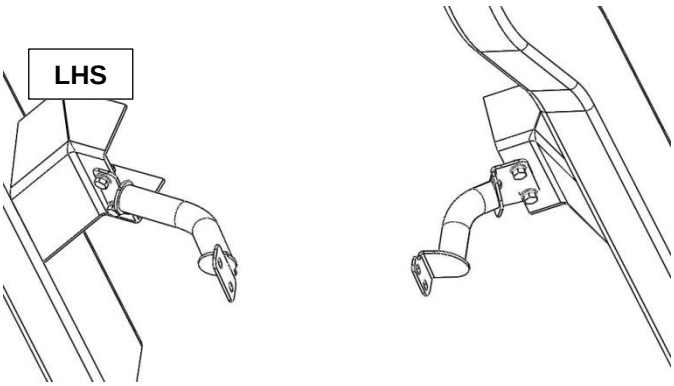

18. Fit left and right braces to the underside of engine mount brackets as shown. Fasten using M10 bolts, spring washers, flat washers and M10 flange nuts finger tight only.

Copyright © 2005 by ARB Corporation Limited. All rights reserved, this document must not be reproduced without the express authority of ARB Corporation Ltd

FITTING PROCEDURE

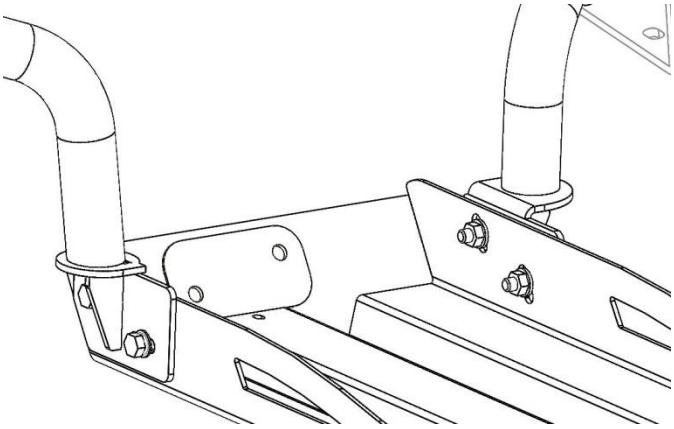

With the aid of a second person;

19. Lift and fit the main panel assembly to braces with the rear of the panel above the transfer case panel (shown below) using M8 x 1.25 x 25 mm bolts, spring washers, flat washers and flange nuts as shown. Leave finger tight only.

20. Check main panel assembly is above the transfer case panel as shown.
21. Place three alloy spacers above the panel ensuring the slots align with the main panels.
22. Fix using three M12 x 1.5 x 50 mm bolts, flat and spring washers, finger tight only.

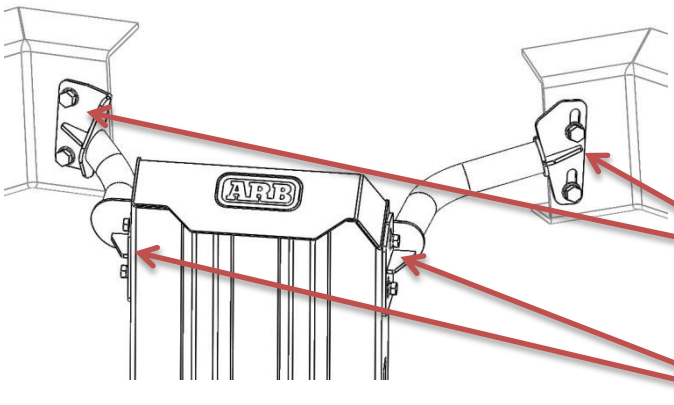

23. **Adjust the front panel to the centre location, ensuring that a minimum 10 mm clearance is achieved from all engine components and piping.**

    Torque to specification.

    M10 - **44 Nm.**

    M8 - **22 Nm.**

Copyright © 2005 by ARB Corporation Limited. All rights reserved, this document must not be reproduced without the express authority of ARB Corporation Ltd

FITTING PROCEDURE

24. Tighten rear bolts until the panel is firmly against the chassis. Check main panel clearance to exhaust.

25. **Remove spacer plates if possible to achieve a minimum clearance of 7 mm.**

    Torque to specification.

    M12 - **77 Nm.**

26. Torque rear transfer case bolts loosened previously to manufactures specification.

FITMENT CHECK LIST:

- **FRONT PANEL IS ADJUSTED TO PROVIDE A MINIMUM 10 MM CLEARANCE TO ALL ENGINE COMPONENTS INCLUDING PIPING AND HOSES.** ☐
- **REAR CANISTER HOSES ARE ADJUSTED TO BE IN THE CENTRE OF THE ACCESS CUT OUTS. CHECK HOSES CAN NOT CONTACT PANEL.** ☐
- **ALL FASTENERS ARE TORQUED TO SPECIFICATION.** ☐
- **REMOVED COMPONENTS ARE RECYCLED.** ☐

FITTED PRODUCT

Copyright © 2005 by ARB Corporation Limited. All rights reserved, this document must not be reproduced without the express authority of ARB Corporation Ltd