FITTING INSTRUCTIONS

Part Number: **5750320**

Product Description: **REAR WHEEL CARRIER ONLY**

Suited to vehicle/s: **JK JEEP WRANGLER WITH 5650360 BASE BAR FITTED**

WARNING

ALSO, NOTE THE FOLLOWING:

- This product must be installed exactly as per these instructions using only the hardware supplied.
- In the event of damage to any rear bar component, contact your nearest authorised ARB stockist.
- Do not use this product for any vehicle make or model, other than those specified by ARB.
- Do not remove labels from this rear bar.
- This product or its fixing must not be modified in any way.
- The installation of this product may require the use of specialized tools and/or techniques
- It is recommended that this product is only installed by trained personnel
- These instructions are correct as at the publication date. ARB Corporation Ltd. cannot be held responsible for the impact of any changes subsequently made by the vehicle manufacturer
- During installation, it is the duty of the installer to check correct operation/clearances of all components
- Work safely at all times
- Unless otherwise instructed, tighten fasteners to specified torque

ARB 4x4 ACCESSORIES

Corporate Head Office

42-44 Garden St
Kilsyth, Victoria
AUSTRALIA 3137

Tel: +61 (3) 9761 6622
Fax: +61 (3) 9761 6807

Australian enquiries sales@arb.com.au
North & South American enquiries sales@arbusa.com
Other international enquiries exports@arb.com.au

www.arb.com.au

Copyright © 2005 by ARB Corporation Limited. All rights reserved, this document must not be reproduced without the express authority of ARB Corporation Ltd

GENERAL CARE AND MAINTENANCE

By choosing an ARB Bar, you have bought a product that is one of the most sought after 4WD products in the world. Your bar is a properly engineered, reliable, quality accessory that represents excellent value. To keep your bar in original condition it is important to care and maintain it following these recommendations:

- Prior to exposure to the weather your bar should be treated to a Carnauba based polish on all exposed surfaces. It is recommended that this is performed on a six monthly basis or following exposure to salt, mud, sand or other contaminants.
- As part of any Pre Trip Preparation, or on an annual basis, it is recommended that a thorough visual inspection of the bar is carried out, making sure that all bolts and other components are torqued to the correct specification. Also check that all wiring sheaths, connectors, and fittings are free of damage. Replace any components as necessary. This service can be performed by your local authorized ARB Stockist.

FITTING REQUIREMENTS

REQUIRED TOOLS FOR FITMENT OF PRODUCT:

TORQUE WRENCH 20-280Nm (16-250lbs)	**SIKAFLEX – (BLACK)**
BASIC TOOL KIT	**CENTRE PUNCH**
ELECTRIC DRILL AND DRILL BITS	**SOFT HAMMER**
TORX KEYS OR SOCKETS	**CRC DRY GLIDE FILM LUBRICANT OR SIMILAR**
BEARING GREASE – (HIGH WATER RESISTANCE).	**ISOPROPYL ALCOHOL OR WAX & GREASE REMOVER**

HAVE AVAILABLE THESE SAFETY ITEMS WHEN FITTING PRODUCT:

Protective eyewear		**Hearing protection**	

NOTE: 'WARNING' notes in the fitting procedure relate to OHS situations, where to avoid a potentially hazardous situation it is suggested that protective safety gear be worn or a safe work procedure be employed. If these notes and warnings are not heeded, injury may result.

FASTENER TORQUE SETTINGS:

SIZE	Torque Nm	Torque lbft
M6	9Nm	7lbft
M8	22Nm	16lbft
M10	44Nm	32lbft
M12	77Nm	57lbft
M20	200Nm	147lbft

OPTIONAL PARTS: 5750310 LICENSE PLATE ASSY

Copyright © 2005 by ARB Corporation Limited. All rights reserved, this document must not be reproduced without the express authority of ARB Corporation Ltd

PARTS LISTING			
APPLICATION.	**PART NO.**	**QTY**	**DESCRIPTION**
ASSY BUSHING TO REAR BAR	**4654025**	**1**	**ASSY BUSHING**
	6151250	**2**	**BOLT M12 X 1.75 X 90 ZP**
	4581050	**2**	**WASHER SPRING ½ X 3/16 X 3/16 ZP**
	4581011	**2**	**WASHER FLAT, M12 X 27 X 4**
	6151204	**1**	**BOLT M10 X 1.5 X 35 ZP**
	4581048	**1**	**WASHER SPRING M10 TZP 480**
	4584296	**1**	**WASHER FLAT, M10 X 30 X 5 ZP**
	3194565	**1**	**PLATE LOCK WASHER M10**
	3194594	**1**	**PLATE LOCK WASHER M10**
	3194595	**1**	**PLATE LOCK WASHER M10**
	160806	**2**	**O-RING 60 ID X 3.5MM**
	4721800	**1**	**TUBE CRUSH**
	3194575	**1**	**COVER PLATE**
TAILGATE BRACKET TO VEHICLE	**3759238**	**1**	**DOOR BRACKET JK**
	6260006	**1**	**CARRIER ARM STOP**
	3194593	**1**	**PLATE WASHER**
	6151084	**2**	**BOLT M8 X 1.25 X 40 ZP**
	6151032	**2**	**NUT NYLOC M8 X 1.25**
	4584325	**2**	**WASHER SPRING M8 X 3/32 X 3/32**
	180505	**3**	**BTZP**
			CABLE TIE PLUG 160MM WHITE
LIGHT POST TO ARM	**4654021**	**1**	**LIGHT POST**
	215943	**2**	**STICKER PLUG COVER**
	6151022	**3**	**BOLT M8 X 1.25 X 25**
	4581044	**3**	**WASHER FLAT, M8 ZP**
	4581046	**3**	**WASHER SPRING, M8 X 3/32 X 3/32**
	6151132	**2**	**NUT FLANGE M8 X 1.25 ZP**
	3199915	**1**	**CAGE NUT PLATE**
	6151303	**1**	**CAGED NUT M8**
	180302	**1**	**CABLE TIE 180MM BLACK**
	180505	**1**	**CABLE TIE PLUG 160MM WHITE**
	6151384	**4**	**SCREW 8G X 16MM BTZP**
ARM TO REAR BAR	**4654019**	**1**	**ARM ASSY**
	3163104	**1**	**TUBE BLANKING PLUG**
	215618	**1**	**ARB DOME BADGE SML**
	4761167	**1**	**SHAFT SEALING CAP**
	6151094	**1**	**BOLT M12 X 1.25 X 30 ZP**
	4581050	**1**	**WASHER SPRING, ½ X 3/16 X 3/16 ZP**
	271BLK	**2**	**SIDE RAIL PLUG**
	6500003	**1**	**LIGHT POST PLUG**
TURNBUCKLE ASSEMBLY TO VEHICLE	**6151633**	**1**	**BALL JOINT M10 X 1.5 LH**
	6151634	**1**	**BALL JOINT M10 X 1.5 RH**
	6151632	**1**	**TURNBUCKLE M10 X 1.5LH & RH**
	6151359	**2**	**THREAD**
			NUT NYLOC M10 X 1.25 ZP

Copyright © 2005 by ARB Corporation Limited. All rights reserved, this document must not be reproduced without the express authority of ARB Corporation Ltd

HIGH LIFT JACK BKT TO ARM	**3759234** **3759231** **3759251** **6151661** **6781428** **6151590** **6151548** **6151262** **6151322** **4581081**	**1** **1** **1** **2** **1** **1** **2** **2** **1** **1**	**HIGH LIFT BRACKET** **HIGH LIFT LOCKING PLATE** **HIGH LIFT LOCK DOWN PLATE** **KNOB M10 X 1.5 X 40** **HIGH LIFT ANTI SLIP RUBBER FOOT** **PAD** **M8 X 1.25 X 40 SHCS** **NUT FLANGE M8 X 1.25 BTZP** **BOLT M8 X 1.25 x 20 BZ** **NUT NYLOC M10 X 1.5** **WASHER FLAT M8 S/STEEL**
WHEEL BRACKET TO ARM	**3759296** **3758380** **6151382** **6151305** **6151360** **4581007** **4581050** **6151357** **6151321**	**1** **1** **3** **2** **2** **2** **2** **1** **1**	**BRACKET WHEEL MOUNT** **BRACKET CAGE NUT MOUNT** **WHEEL STUDS M12 WITH NUTS** **NUT M12 CAGE** **BOLT M12 X 35 ZP** **WASHER PANEL M12** **SPRING WASHER M12** **BOLT M10 X 30 SEMS** **NUT M10 FLANGE**

VEHICLE PREPARATION

1. If vehicle is already fitted with ARB Rear Bar (Part No. 5650360) remove in reverse order of fitting instructions (Part No.3789186 - stopping at step number 5). If ARB Rear Bar is not yet fitted carry out steps 1 – 5 from Fitting Instructions (Part No. 3789186).

CARRIER PREPARATION

2. If fitted remove carrier cover plate and retain screws, washers, nuts. (Cover plate will not be re-used).

Copyright © 2005 by ARB Corporation Limited. All rights reserved, this document must not be reproduced without the express authority of ARB Corporation Ltd

CARRIER PREPARATION

3. Fit the new Carrier Plate Cover with the hole to the Rear Bar using 2 x M6 x 16 button head SS screws, SS flat washers, ZP flat washers and nyloc nuts. Place Stainless Steel hardware on top of cover plate as shown.

   Do not fully tighten at this time. Must be adjusted and tightened after carrier is fitted and aligned.

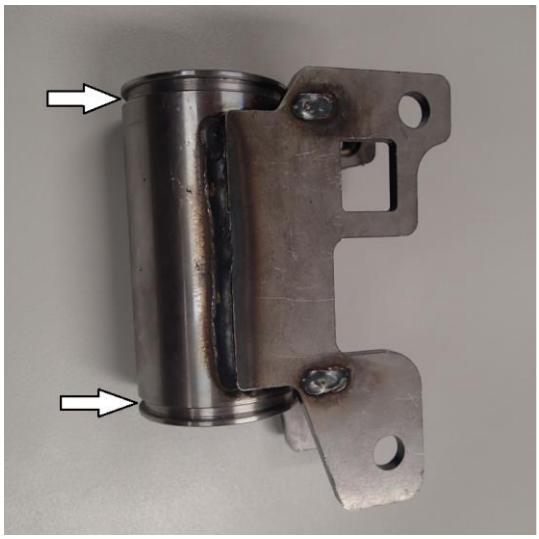

4. Before fitting Pivot Bushing lightly grease O-rings and install onto Pivot Bushing grooves indicated.

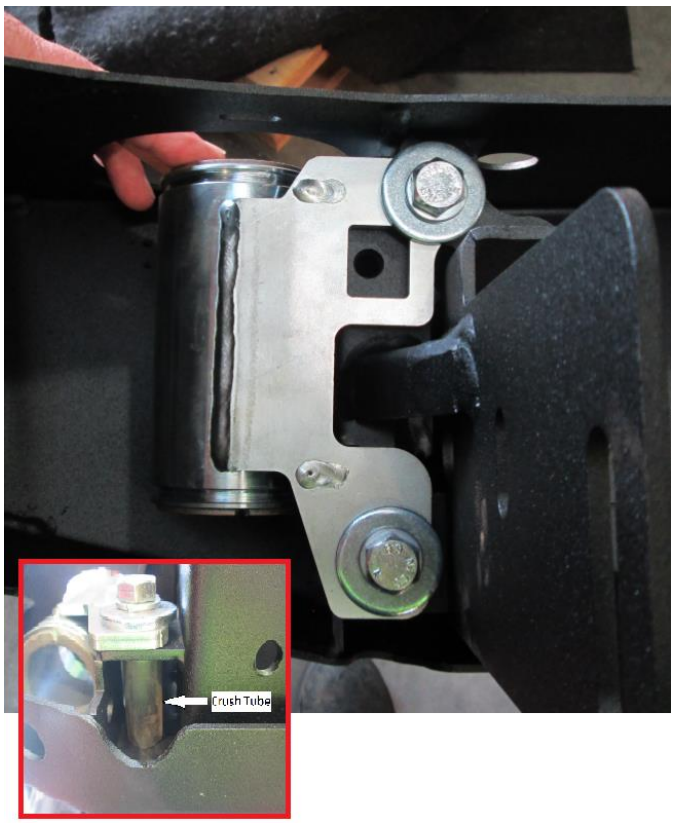

5. Install Pivot Bushing onto Rear Bar using M12 x 90 Bolts, ½" Spring Washers, M12 Flat Washers, Crush tube (on lower bolt).

   Do not fully tighten at this time.

Copyright © 2005 by ARB Corporation Limited. All rights reserved, this document must not be reproduced without the express authority of ARB Corporation Ltd

VEHICLE PREPARATION	
	6. Fit (Re-fit) Rear bar to vehicle as per fitting instructions (Part No. 3789186) Steps 7 – 14.
	7. Remove O.E. wheel holder from vehicle and retain all components. Remove and un-plug stop light housing.
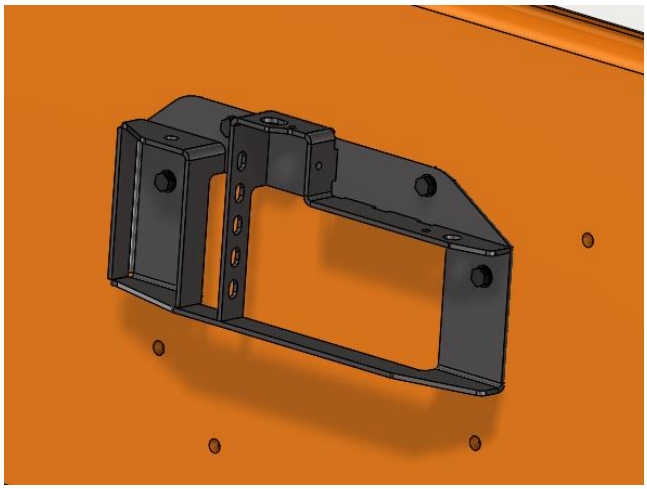	8. Install Tailgate Bracket to vehicle. Re-use O.E. Bolts.

Copyright © 2005 by ARB Corporation Limited. All rights reserved, this document must not be reproduced without the express authority of ARB Corporation Ltd

CARRIER PREPARATION

9. Lightly grease pivot bush bore and top face.

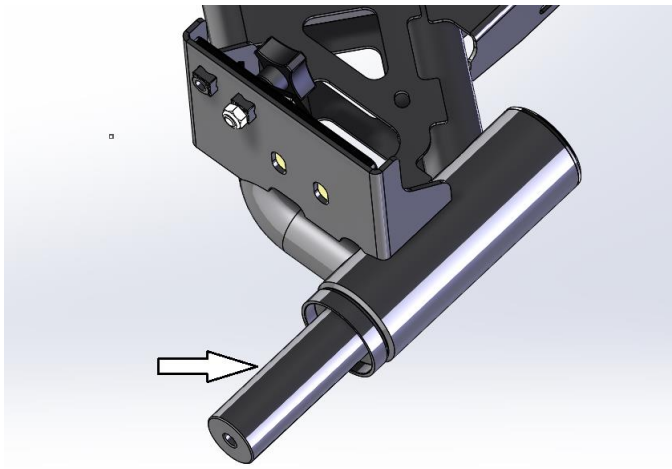

10. Lightly grease Carrier Arm shaft.

CARRIER INSTALLATION

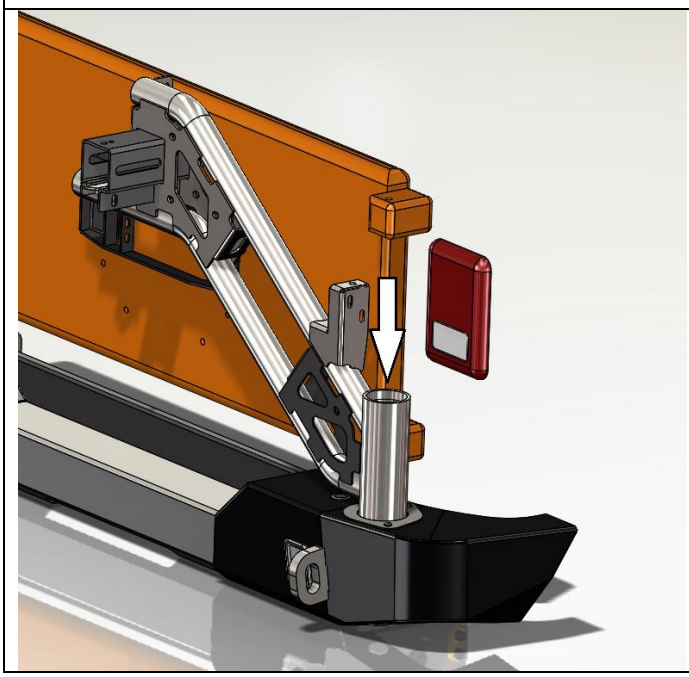

11. Install Carrier Arm into Rear Bar/Pivot Bushing.

Copyright © 2005 by ARB Corporation Limited. All rights reserved, this document must not be reproduced without the express authority of ARB Corporation Ltd

CARRIER INSTALLATION

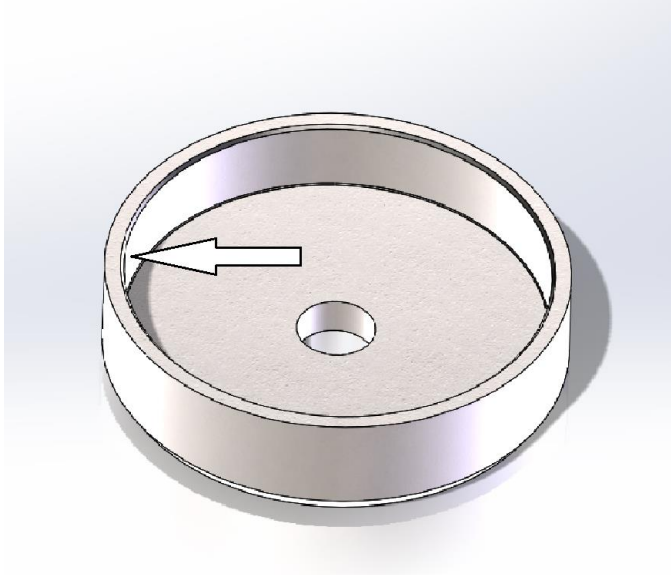

12. Lightly grease inside bore of Shaft Sealing Cap.

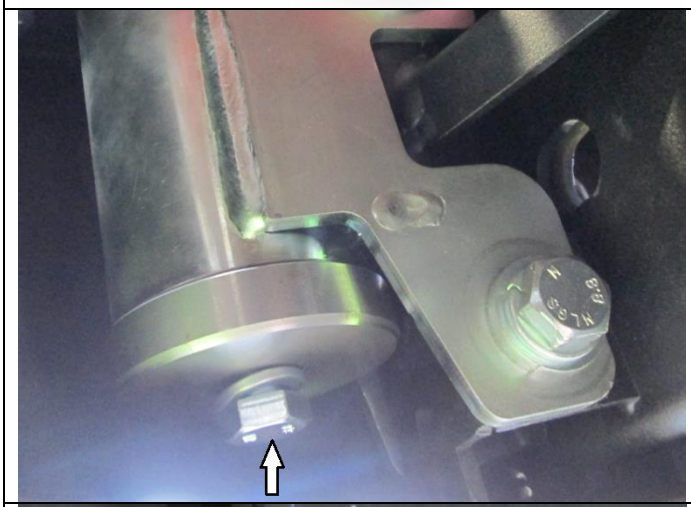

13. From below vehicle install Shaft Sealing Cap using M12 x 30mm bolt and ½' Spring Washer.

    Torque to specification.

    M12 - 77 **Nm.**

14. On level ground, use a spirit level or similar to level the Carrier Arm.

Copyright © 2005 by ARB Corporation Limited. All rights reserved, this document must not be reproduced without the express authority of ARB Corporation Ltd

CARRIER INSTALLATION

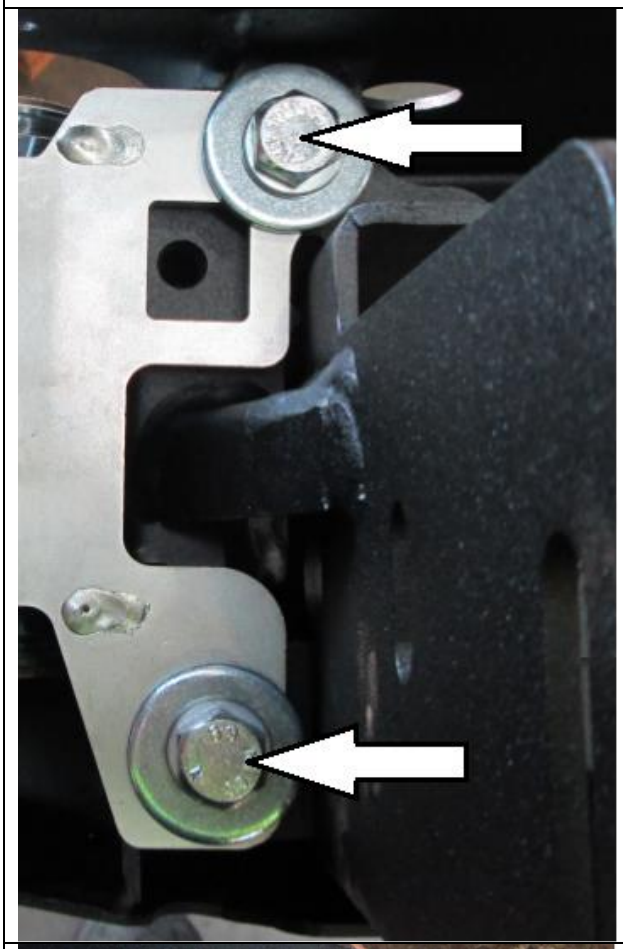

15. Tighten M12 x 90 Bolts.

    Torque to specification.

    M12 - 77 **Nm.**

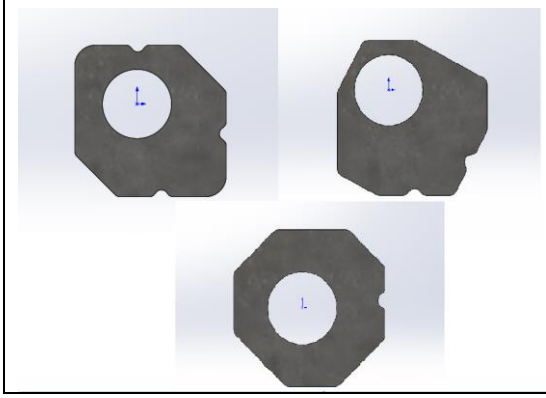

16. Install pivot bush locking bolt assembly.

    M10 x 30 Bolt, M10 Spring Washer, M10 Spring Washer and whichever of the 3 x M10 Plate Lock Washers (Bottom Image) that will fit into the recess and will allow the bolt to pass through. It may be necessary to rotate or flip plate washer over to find the best position.

    Torque to specification.

    M10 - 44 **Nm.**

Copyright © 2005 by ARB Corporation Limited. All rights reserved, this document must not be reproduced without the express authority of ARB Corporation Ltd

CARRIER INSTALLATION

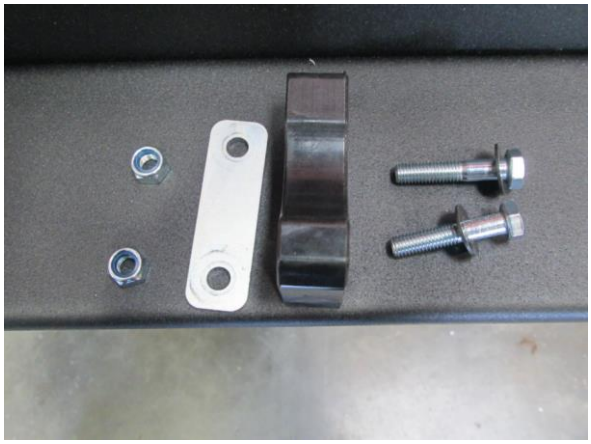

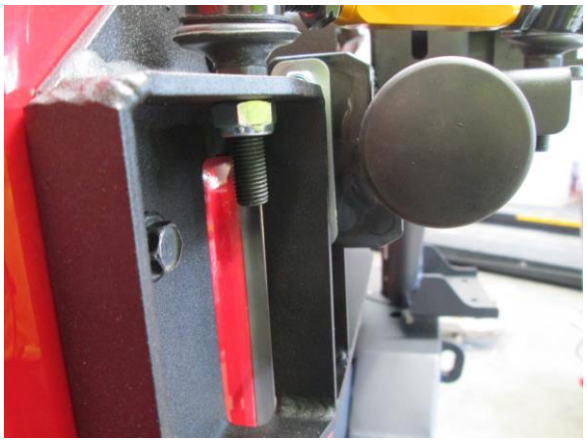

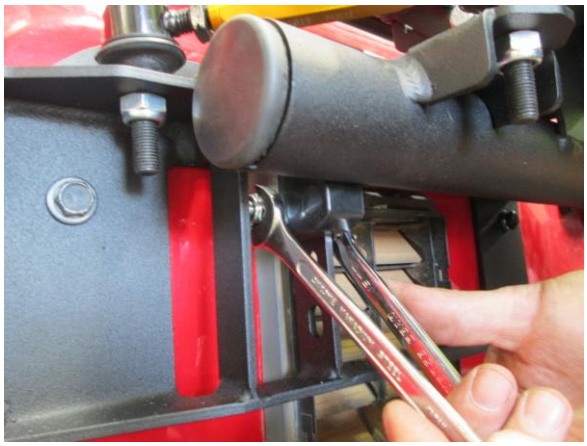

17. Install Carrier Arm Stop using M8 x 40 Bolts, M8 Flat Washers, Plate Washer and M8 Nyloc Nuts.

- Swing Carrier Arm up to Carrier Arm Stop and adjust height to ensure the carrier tube is centred on the carrier stop or climbs slightly upwards when pushed hard into stop. This may require adjustment to suit individual vehicle.

Tighten bolts/nuts.

M8 – 22 **Nm**

Copyright © 2005 by ARB Corporation Limited. All rights reserved, this document must not be reproduced without the express authority of ARB Corporation Ltd

CARRIER INSTALLATION	
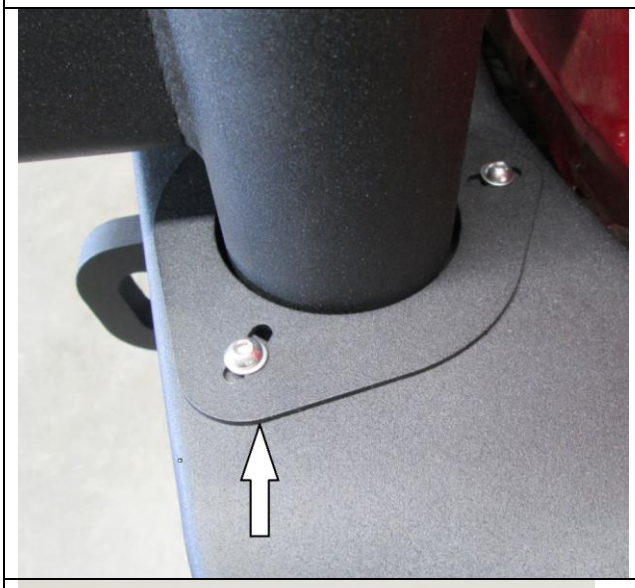	18. Adjust cover plate alignment to centre the cover plate hole to the carrier arm body and tighten bolts. M6 - 9 **Nm.**
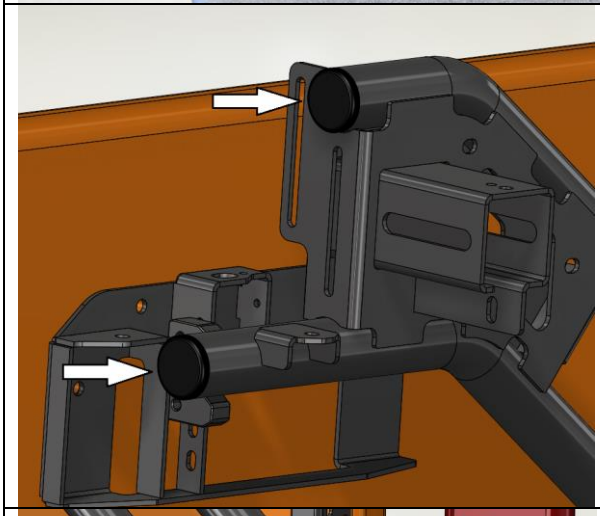	19. Install side rail plugs into the carrier arm tubes. Use rubber or soft mallet if necessary.
	20. Clean upper surface of Hi-lift Jack Support Plate with a clean rag and Isopropyl Alcohol or Wax and Grease Remover and then install “High Lift Anti Slip Rubber Foot Pad”.

Copyright © 2005 by ARB Corporation Limited. All rights reserved, this document must not be reproduced without the express authority of ARB Corporation Ltd

HIGH LIFT JACK BRACKET INSTALLATION

21. Install Hi-Lift bracket. Use Bolts M8 x 20, M8 Spring Washers, M8 Flat Washers and M8 Flange Nuts. Do not tighten fully.

Important: For Hardtop and/or vehicle fitted with 40” tyres bracket should be installed on the outside face, (Second image). For Soft-top vehicle either position may be used.

Copyright © 2005 by ARB Corporation Limited. All rights reserved, this document must not be reproduced without the express authority of ARB Corporation Ltd

22. -Install Hi-Lift Locking Plate and M10 Knob. Use M8 x 40 S/Steel SHCS, M8 S/Steel Flat Washer and M8 NylocNut.

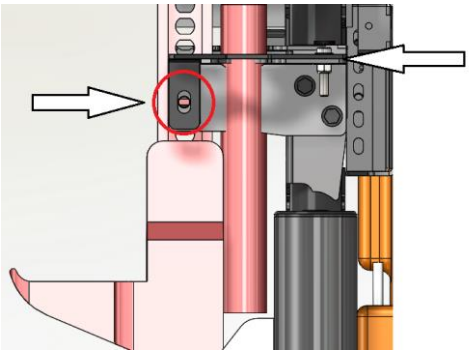

To facilitate adjustment before tightening, place Hi-lift Jack into Hi-lift Jack Support Plate and check that it is possible to install the M10 knob. It may be necessary to space between the carrier arm and the Hi-lift bracket to ensure this can be achieved.

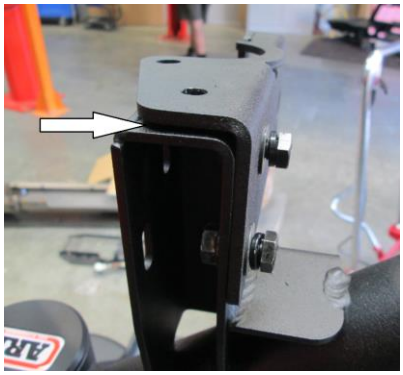

Insert M8 Flat Washers between Hi-Lift Locking Plate and the Hi-lift Bracket. Once alignment has been achieved and the M10 Knob can be installed the Hi-lift Bracket bolts can be tightened. M8 x 40 S/Steel SHCS and M8 Nyloc Nut should be tightened firmly. M8 x 20 Bolts and M8 Flange Nuts can now be fully tightened.

Torque to specification.

M8 - 22 **Nm.**

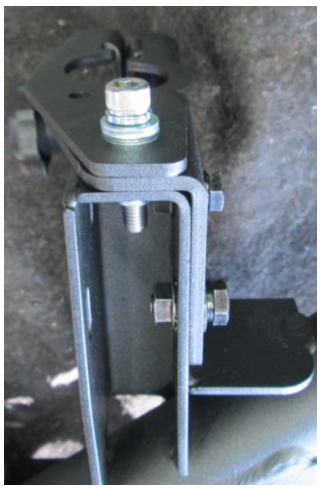

Copyright © 2005 by ARB Corporation Limited. All rights reserved, this document must not be reproduced without the express authority of ARB Corporation Ltd

LIGHT POST INSTALLATION	
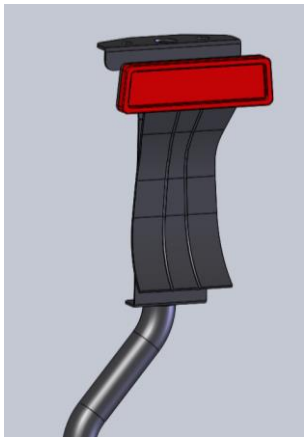	23. Install stoplight housing onto Light-post. Use factory 8G x 16 Screws retained in STEP 8.
	24. Install light post rubber plug on tube end.

Copyright © 2005 by ARB Corporation Limited. All rights reserved, this document must not be reproduced without the express authority of ARB Corporation Ltd

LIGHT POST INSTALLATION

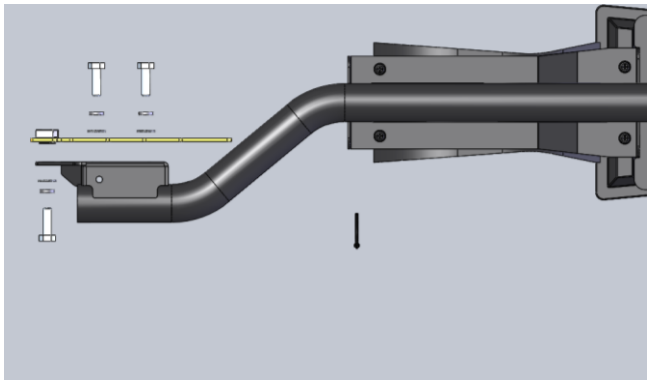

25. Mount Light Post to Carrier Arm. Use M8 x 25 Bolts, M8 Spring Washers, M8 Flat Washers, M8 Flange Nuts, M8 Cage Nut and Cage Nut Plate.

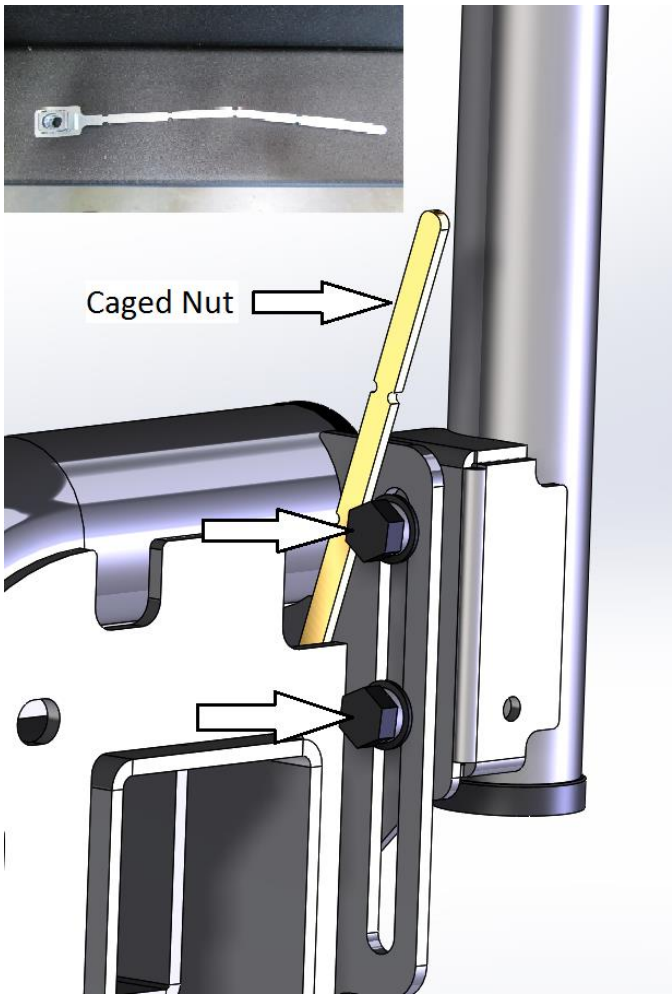

Bend Cage Nut Plate as shown in inset image.

Install into place inside Carrier Arm as per main image.

Do not tighten fully. It will be necessary to fit Spare Wheel Mount and adjust height of Light Post to suit before tightening bolts once desired height is achieved.

Torque to specification.

M8 - 22 **Nm.**

Copyright © 2005 by ARB Corporation Limited. All rights reserved, this document must not be reproduced without the express authority of ARB Corporation Ltd

SPARE WHEEL MOUNT INSTALLATION

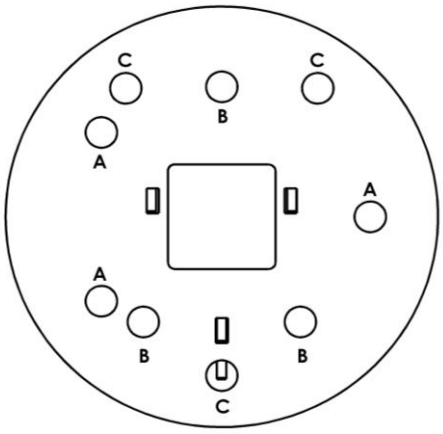

26. Depending on vehicle model fit studs as shown in image.

A- JK **BE SURE OF STUD PATTERN**
B- TJ **IF NON O.E DIFFERENTIALS**
C- YJ **ARE FITTED.**

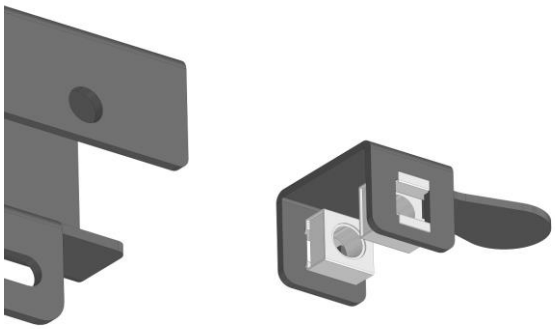

27. Install M12 cage nuts to cage nut plate as shown.

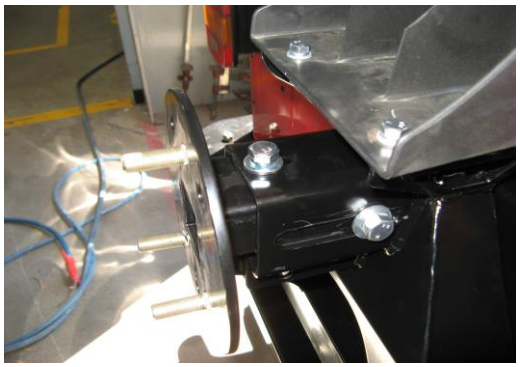

28. ***ALL MODELS. Place wheel mount into arm and secure using two M12 x 35mm bolts, M12 spring washers and M12 flat washers into cage nut plate (slide in through rear of carrier). Leave finger tight. Place wheel on mount ensuring it is inflated as per vehicle tyre placard and tighten all components so inner edge of tyre is sitting on Lightpost Tyre support face.***

*****As previously stated (Step 29), adjust Lightpost height to suit spare tyre and torque to specification*****

Torque Lightpost to specification.

M8 - 22 **Nm.**

Once this is done remove spare tyre only.

Copyright © 2005 by ARB Corporation Limited. All rights reserved, this document must not be reproduced without the express authority of ARB Corporation Ltd

SPARE WHEEL MOUNT INSTALLATION

29. **<u>Move wheel mount inwards approximately 10mm.</u>** This will place some load on the tyre when all is secured. Mark bolt hole position, drill to 10mm and secure using M10 SEMS bolt and M10 flange nut. Tighten M10 bolt first followed by side bolts to specified torque.

    Torque to specification.

    M10 - 44 **Nm.**

    M12 - 77 **Nm.**

    NOTE: Failure to complete this process as per instructions will result in excessive noise, movement and damage to the tyre.

TAILGATE TO TYRE CARRIER TIE-ROD INSTALLATION

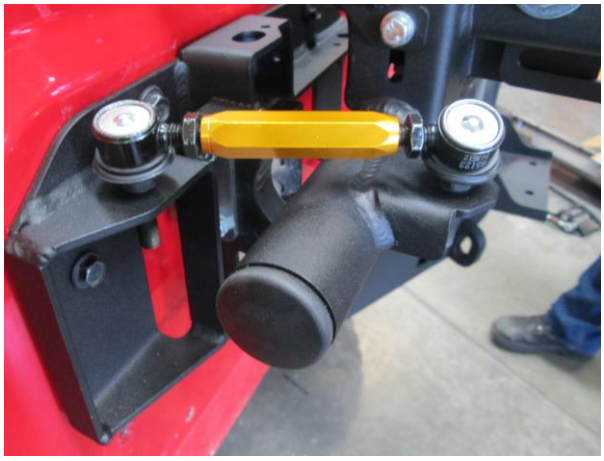

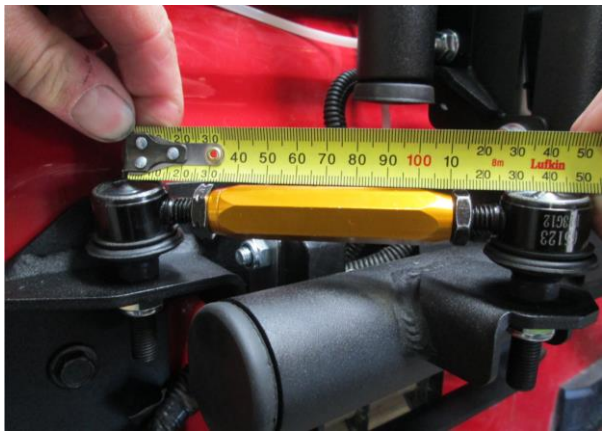

30. Install and adjust tie rod.

    Use Tie-rod and M10 Nyloc Nuts.

    With tailgate partly open set installed tie rod length to approximately 140mm between tie-rod centres. Gently close tailgate, if excessive force is required adjust tie-rod length until carrier arm firmly contacts against carrier arm stop. **Excessive force should not be required to close tailgate.**

    Torque Tie-rod Nyloc Nuts to specification.

    M10 - 44 **Nm.**

Copyright © 2005 by ARB Corporation Limited. All rights reserved, this document must not be reproduced without the express authority of ARB Corporation Ltd

TAILGATE/CARRIER WIRING

31. Clean area around holes in tailgate. Cover holes in tailgate using the two sticker plug covers supplied in the kit.

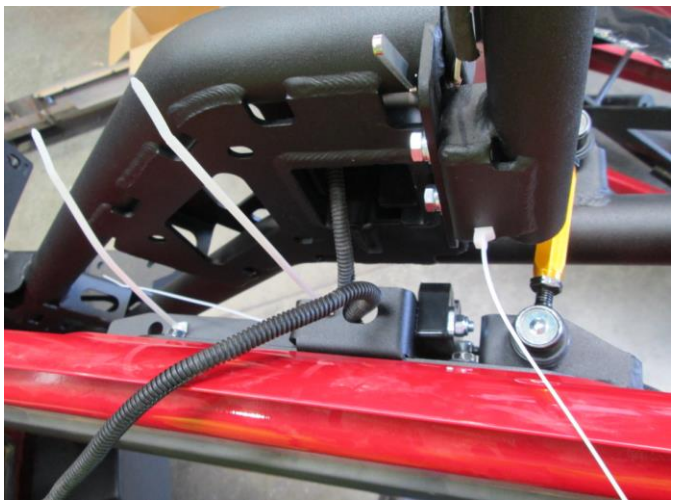

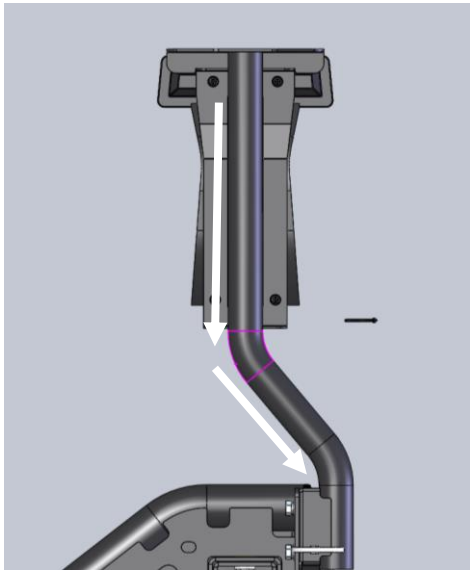

32. Run wiring along desired route and use supplied cable ties to fasten to carrier arm and light post.

Re-plug wiring into stoplight housing.

Copyright © 2005 by ARB Corporation Limited. All rights reserved, this document must not be reproduced without the express authority of ARB Corporation Ltd

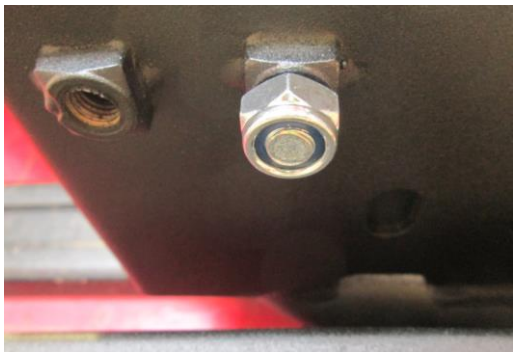

33. Install Hi-Lift clamp plate. Use M10 Knob, M10 Nyloc Nut and Hi-Lift Lock Down Plate.

Put M10 Knob and Clamp in the hole that suits chosen jack position.

Install M10 Nyloc Nut from underside of Hi-lift Jack Support Plate onto the M10 knob. (The Nyloc Nut is to reduce the chances of the M10 knob falling out if left loose). **It is important the Nyloc Nut is fully engaged on the thread of the M10 Knob.**

34. Install handle keeper (Part No. ARB203HKB/ARB203HKR) to Hi-Lift jack to eliminate handle rattle.

Handle keeper must be purchased separately.

Care and Maintenance.

Copyright © 2005 by ARB Corporation Limited. All rights reserved, this document must not be reproduced without the express authority of ARB Corporation Ltd

These helpful hints may assist you in the unlikely event you encounter a problem with the function of your ARB Rear Bar and Carrier. If you need further assistance please contact your local ARB distributor.

‘Creaking’ when opening door or driving vehicle.

1. Nylon block too dry or dirt trapped between block and arm. Clean block and tube stop on arm and spray with CRC Dry Glide lubricant or similar.

High pitched squeak when driving vehicle.

1. Ensure that wheel mount is pinned correctly, main wheel mount bolts and wheel nuts are correctly torqued.
2. Ensure tyre is inflated as per vehicle tyre placard.
3. Ensure pre load of tyre to arm is set as per instructions.

Excessive tyre ‘bouncing’ when closing door or driving vehicle.

1. Ensure that wheel mount is pinned correctly, main wheel mount bolts and wheel nuts are correctly torqued.
2. Ensure tyre is inflated as per vehicle tyre placard.
3. Ensure pre load of tyre to arm is set as per instructions.
4. Ensure pre load of Nylon block to round stop on arm is set as per instructions.

Rattle when driving vehicle.

1. Ensure brackets on arm are not loose. Recovery shackles left in recovery eyes of bar will produce this symptom.

Arm ‘climbs’ up too far onto Nylon block.

1. Ensure Nylon block is adjusted so arm ‘ramps up’ no more than 10mm.

FITTED PRODUCT

Copyright © 2005 by ARB Corporation Limited. All rights reserved, this document must not be reproduced without the express authority of ARB Corporation Ltd