Building your tomorrow.

Load-bearing profiled sheet

Installation instructions

Profiled sheets can be used in roof structures, both as water roofing and as load-bearing structures. The choice is made based on appearance and the required stiffness and the loads the building is subjected to. Load-bearing profiled sheets are used in both insulated and uninsulated roofs as well in the floors of buildings.

External quality control is carried out by Inspecta according to the quality control agreement.

End-use applications

- logistics buildings and warehouses
- industrial buildings
- retail parks
- sport facilities
- agricultural buildings

General 2
Receiving of goods..... 3
Unloading and handling 3
Cutting..... 3
Work safety..... 3
Safety anchor 3
Storing the profiled sheets on site 4
Information for installation..... 4
Ordering the sheets..... 4
Load-bearing profiled sheets – general 4

1. Insulated roof
Acoustic perforation..... 5
Semi-warm roof..... 6
Fastening sheets to supports 6
Side overlapping of sheets..... 6
End overlap at support, hinge joint 7
Extended end overlap, type 0.1/0.0 (moment stiff joint .. 7
Extended end overlap, type 0.1/0.1 (moment stiff joint) .. 8
Openings 8

2. Uninsulated roof (water roof)
Delivery conditions 9
End overlapping..... 9
Fastening close to support..... 10
Roof pitch 10
Table 4.0 Overlapping of profiled sheets
according to roof pitch 10
Side overlapping 11
Fasteners..... 12
Fixing profiled sheet to structural steel..... 13
Fastening profiled sheet to light-weight purlin 13
Attaching profiled sheet to wood 13
Overlap joint of profiled sheet..... 14
Structural end overlapping of profiled sheets 14
Attaching profiled sheets to concrete 14
Technical data 15
Receiving of goods..... 16

General

These instructions are for load-bearing profiled sheets. The choice of a profile type will be made based on appearance and the required stiffness and the loads the building is subjected to. Load-bearing profiled sheets are used in both insulated and uninsulated roofs as well in the floors of buildings.

The installation instructions presented in this manual are examples only and they are not directly applicable in all cases. In conflicting situations, follow the structural designer's instructions or contact our technical service (see contact information on the back cover).

Receiving of goods

Check that the delivery is in accordance with the order and that all items specified in the delivery note are included. Faulty or incorrect deliveries and any transport damages must be stated on the waybill and Ruukki or the retailer must be notified immediately. Any complaints must be made within 8 days of the delivery. The company is not liable for any costs resulting from the replacement of products that have been installed in non-compliance with the installation instructions.

Unloading and handling

Unload the profiled sheets from the truck and place them on an even base. Place approx. 200-mm-high supports under the sheet bundle with a spacing of about one metre. The lifting belts are only meant for unloading the sheets. Ruukki does not take responsibility if they are used for other lifting, such as lifting the sheets up to the roof.

Cutting

The profiled sheets are delivered cut-to-length. In some cases (for example in mitres, hipped roofs and lead-ins), sheets must be cut on site. The profiled sheets can be cut using a circular saw intended for cutting sheet metal, tin snips, a nibbling machine, a jigsaw or any cold cutting tool, depending on the shape of the profiled sheet. Using an angle grinder equipped with a cutting disc is prohibited, see Figure 1.

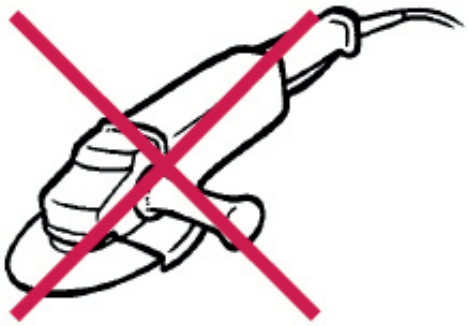

Figure 1.

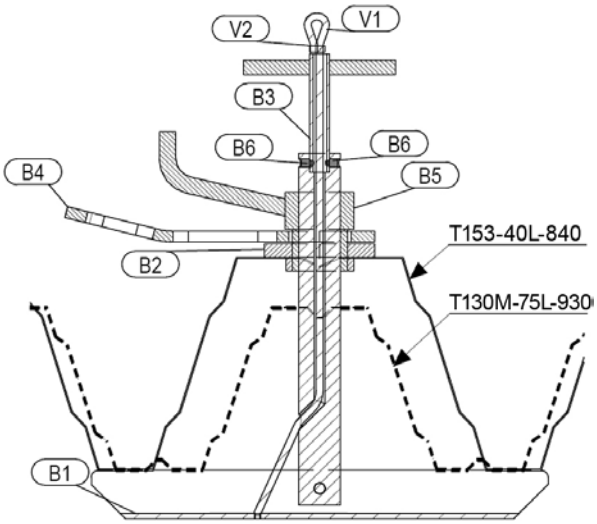

Figure 2.

The profiled sheet must be protected during cutting, as the sharp chips may damage the coating. Any swarf must be carefully brushed away from the sheet surface. It is recommended that you apply appropriate touch-up paint to any scratches that may have occurred on the coating as well as on the cut edges of the sheets which remain visible.

Work safety

Always wear work gloves and protective clothing when handling the sheets. Be careful with sharp edges and corners. When the sheets are being moved, do not go under the load. Make sure that the lifting belts / chains are strong and firmly attached. Avoid handling the sheets in heavy wind. When moving around on the roof, be very cautious, use appropriate safety equipments, for example safety, harness and safety anchor (insulated roof), and suitable footwear for installation work. Always follow the safety regulations in force when performing any work.

Safety anchor

The safety anchor device SA113-153, attached to the load-bearing profiled sheet, is according to directive 89/689/EEC. Safety anchor SA113-153 is a safety device for working on roofs, which was designed and tested by Ruukki. The device is only compatible with load-bearing profiled sheets manufactured by Ruukki, within the limits specified in the safety anchor's usage instructions. See separate instructions for safety anchor. See Figure 2.

Storing the profiled sheets on site

Under normal conditions, the sheet bundles can be stored for about a month, either in their package or unpacked. When the sheets are to be stored for a longer period, the sheet bundles must be covered and placed on an inclined base so that any water trapped between the sheets can flow out or evaporate.

The sheet bundles need to be stored on a level surface off the ground, with no more than three bundles on top of each other. In long-term storage, the sheets need to be protected from rain, but so that the air flow beneath each bundle is guaranteed. Storing zinc-coated sheets outside should be avoided because white rust may form on tightly-bound bundles when they become wet. Anti-condensation coated sheets should always be protected if they are stored on site.

Information for installation

When lifting the sheet bundles, make sure that the lifting belts do not slip along them. If the slings are allowed to slip, the sharp edges of the bundles could cut through the belts. Slipping can be avoided by using a lifting boom. The belts can be protected from the sharp edges by, for example, placing an edge protector between the bundle and the belt. Once on the roof, the sheet bundles should be placed so that they do not cause too much load on the roof structure. If necessary, advice can be ask from the structural designer. In addition, the sheets need to be tied together, so that they are not blown off from the roof. Anti-condense coated sheets should not be allowed to rub against each other when they are handled as the coating can become damaged.

The sheets need to be installed according to the installation plan drawn up by the designer, whose instructions need to be followed in fastening, overlapping, etc. Placing a load on the sheets when installing them, or any other time, except for what has been taken into account in the structural design, is prohibited without authorisation from the designer.

Ordering the sheets

Ruukki delivers the profiled sheets according to the customer's/designer's specifications, such as sheet thickness, length, coating and colour. Stock raw-materials are galvanized or white polyester in various thicknesses. When ordering the products, it is advisable to take into account the correct installation order (see installation plan) to ensure that the correct profiled sheets are delivered to the right place at the right time.

Load-bearing profiled sheets – general

Product name explanation:

T130M-75L-930 (colour on the narrow flange))

T	trapezoidal
130	height class
75	width of crown
L	load-bearing
930	effective width
M	micro profilointi

See Figure 3.

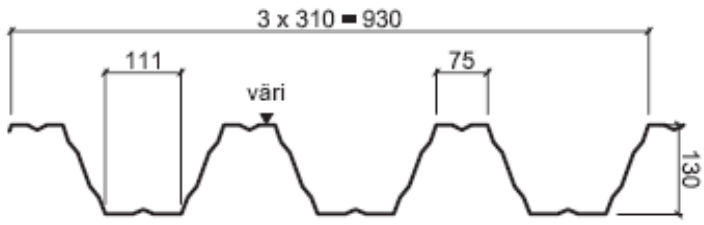

Figure 3.

1. INSULATED ROOF

The narrow flange of the load-bearing roofing sheet faces upwards in the package, so the sheet needs to be turned when installing it in insulated roofs. An exception is the anti-condensation coated sheet, which is delivered with the wide flange facing upwards, when semi-warm roof is in question.

In insulated roofs, the load-bearing profiled sheets are installed with the wide flange facing upwards, creating sufficient support width for the insulation material. As the edge flanges of the sheet face downwards, heads of the overlapping screws will not damage the vapour barrier. The fasteners of the load-bearing profiled sheets need to have valid approvals for usage. See Figure 4.

Acoustic perforation

Ruukki's load-bearing profiled sheets can be manufactured and delivered with web perforations for improving sound absorption. Each sheet type has its own designed standard perforation pattern, in which the perforations are located in the webs of the profiled sheets. In web perforation, the size of the holes are Ø 3 mm and the hole's area is 15% of the perforated area. Web and flange perforation is available on T153 profile designated as T153 AcuB, the size of holes are 4mm and hole area is 30 of the perforated area. The perforations affect the load-bearing capacity of the profiled sheet, which needs to be taken into consideration when designing and installing perforated sheets.

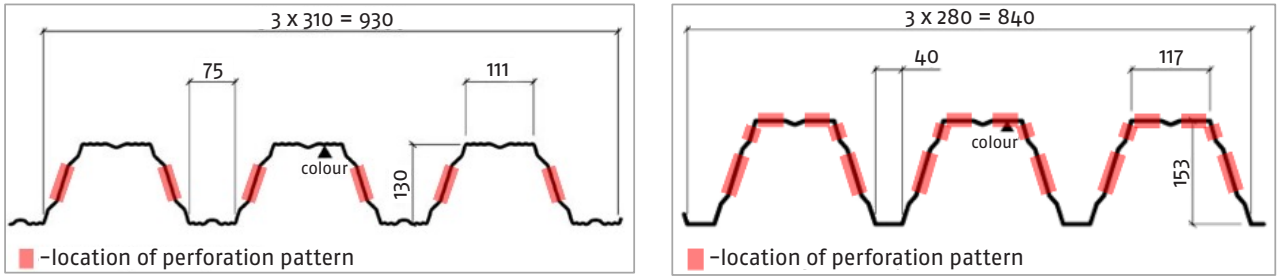

Locations of web perforation and web- and flange perforation

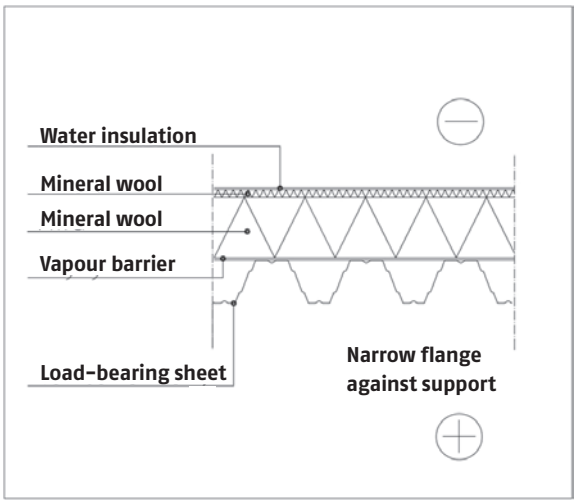

Figure 4. Example of insulated roof structure

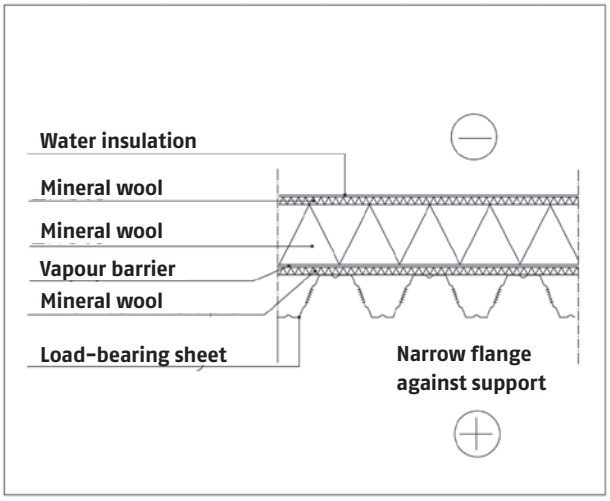

Figure 5. Example of roof structure with perforated sheet.

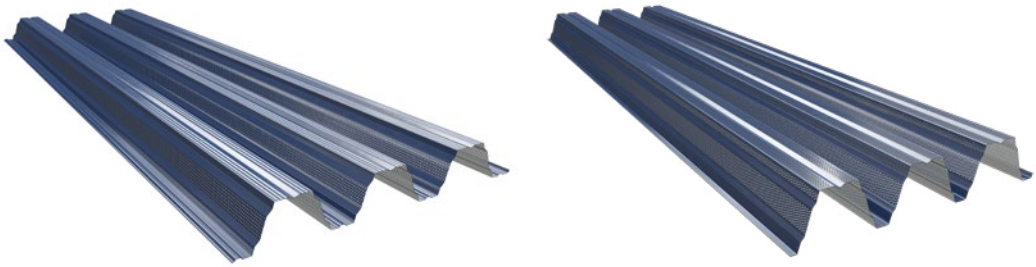

Figure 6. Example of 3 mm 15% web and web and flange perforation (T153 AcuB).

Semi-warm roof

See Figures 7 and 8.

Fastening sheets to supports

The profiled sheets are fastened to the support at the centre of the smooth part of the flange. The sizes, types and number of fasteners are specified by the designer. The picture below shows the smallest possible distance from the screw to the edge of the sheet. Measurement b = width of the un-stiffened flat area. However, the distance from the edge must not be less than 25 mm. See Figure 9.

Side overlapping of sheets

Normally the profiled sheets are installed with a ½ wave side overlap. The load-bearing capacity of the sheet can be enhanced with an additional one- or two wave side overlap. The sheets are attached to each other at each sheet's side joint with the rivets or overlapping screws specified by the structural designer. The maximum distance between the fasteners is 500 mm. The stressed skin effect might require shorter distances between fasteners. When installing fasteners, ensure that the fasteners perforate all of the sheets. In the case of web and flange perforated profiles, ensure that perforation holes of lower and top profile converge. See Figure 10.

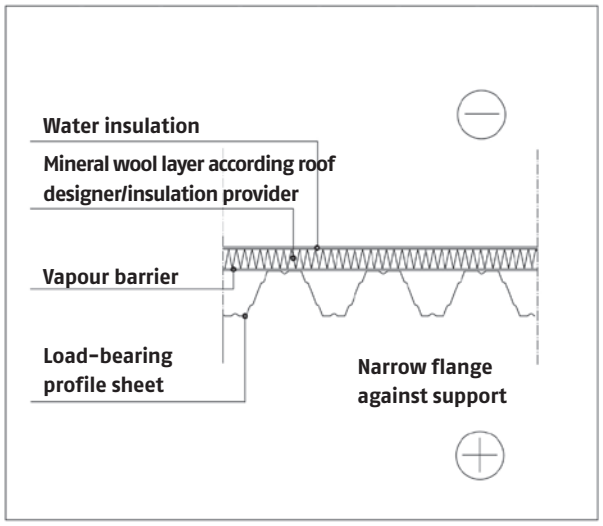

Figure 7.

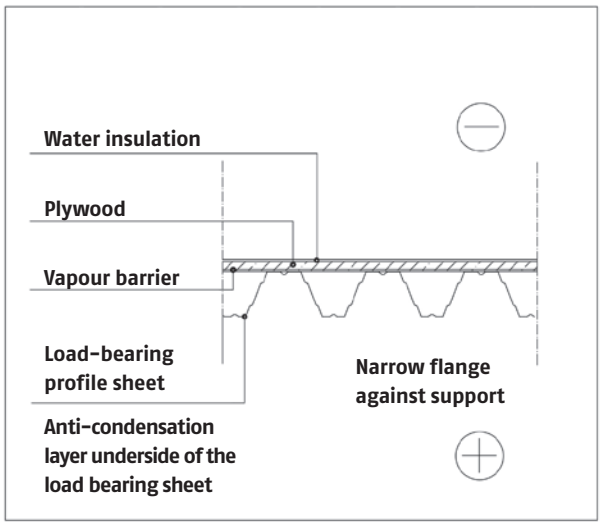

Figure 8.

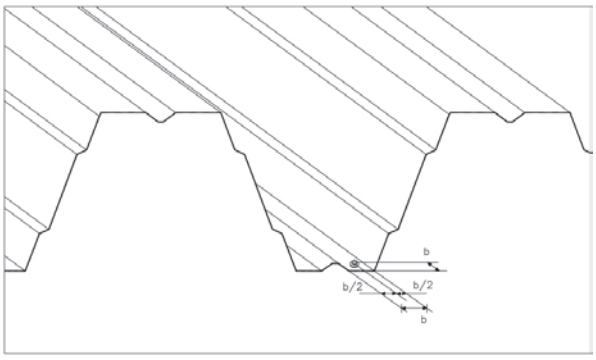

Figure 9.

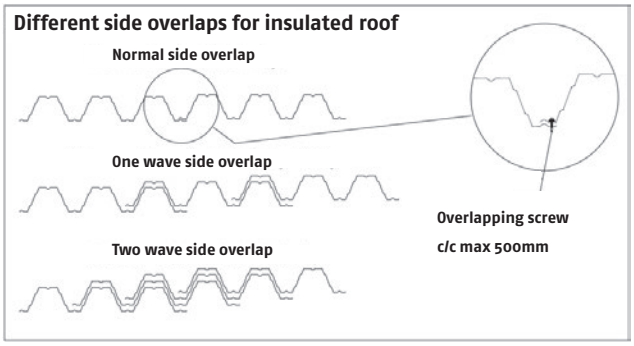

Figure 10.

End overlap at support, hinge joint

In hinge joint end overlapping, the sheets need to overlap by a minimum of 150 mm. The sheets are attached to the support according to the structural designer's instructions. See Figure 11.

Extended end overlap, type 0.1/0.0 (moment stiff joint)

In a one-sided moment stiff - joint, the sheets overlap at the support, as shown in the figure 12. The length of the overlap e1 is at least 75 mm from the centre of the support and e2 is usually 0.1 x span length of the cantilevered side. The cantilevered sheet must always be installed under the non cantilevered one. In a moment stiff joint, the structure has been designed to be continuous and the profiled sheets need to be attached to each other at their webs. The screws need to be positioned in the web following the edge and centre distances stated in the specifications. The structural designer specifies the number and positions of the screws. Measurements b1 and b2 need to be at least 25 mm. In the case of web and flange perforated profiles, ensure that perforation holes of lower and top profile converge. See Figure 12.

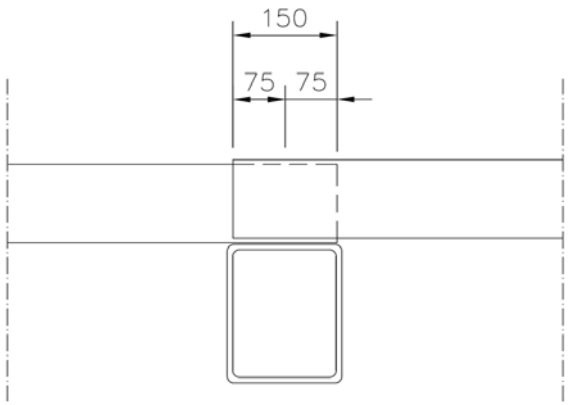

Figure 11.

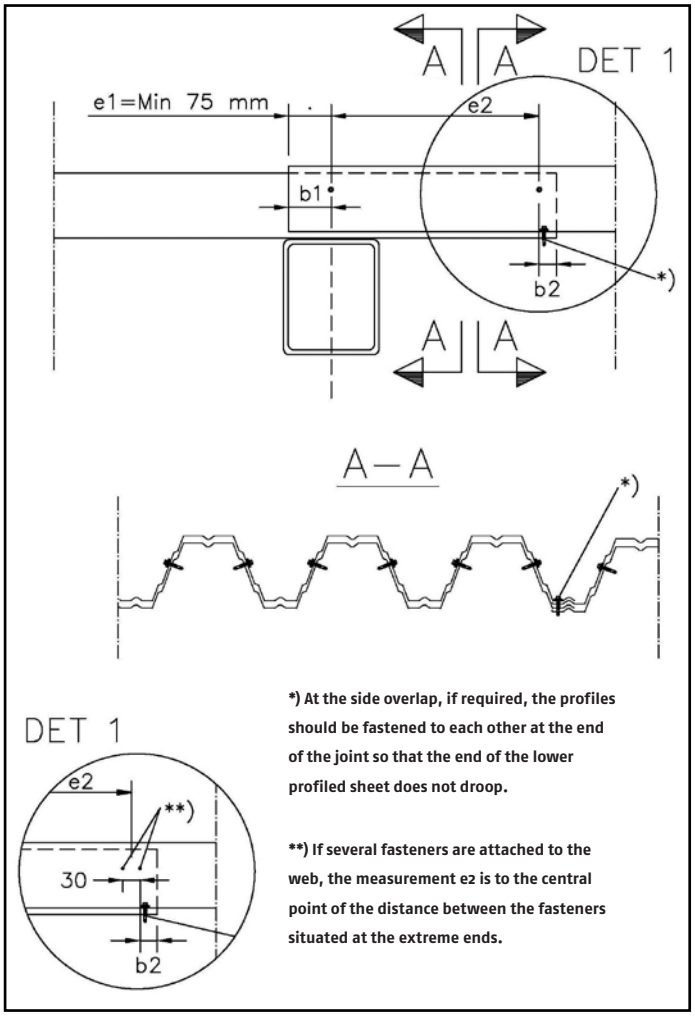

Figure 12.

Extended end overlap, type 0.1/0.1 (moment stiff joint)

In moment stiff end joints, the sheets are installed on top of each other at the support, as shown in the example. In two-sided moment stiff joints, the overlapping length e1 and e2 is usually 0.1 x span length of the cantilevered side. In a moment stiff extension, the structure has been designed to be continuous and the profiled sheets need to be fastened to each other at their webs. The screws need to be positioned in the web following the edge and centre distances stated in the specifications. The structural designer specifies the number and positions of the screws. Measurement b needs to be at least 25 mm. See Figure 13.

Openings

Consult structural designer in case of openings to be cut to the sheet. Ruukki has a solution for larger openings, see figure 14. Ruukki's sales or technical customer service will gladly be of service in this matter.

Structure

11. Hat profile
Each sheet profile sheet has its own hat profile type.
Material thickness is 3 mm. One or two hat profiles can be placed on both sides of the opening.

2. C profile
One profile on each side of the opening. Material thickness is 3 mm.

3. Vapour barrier
Taped to a device. See Figure 14.

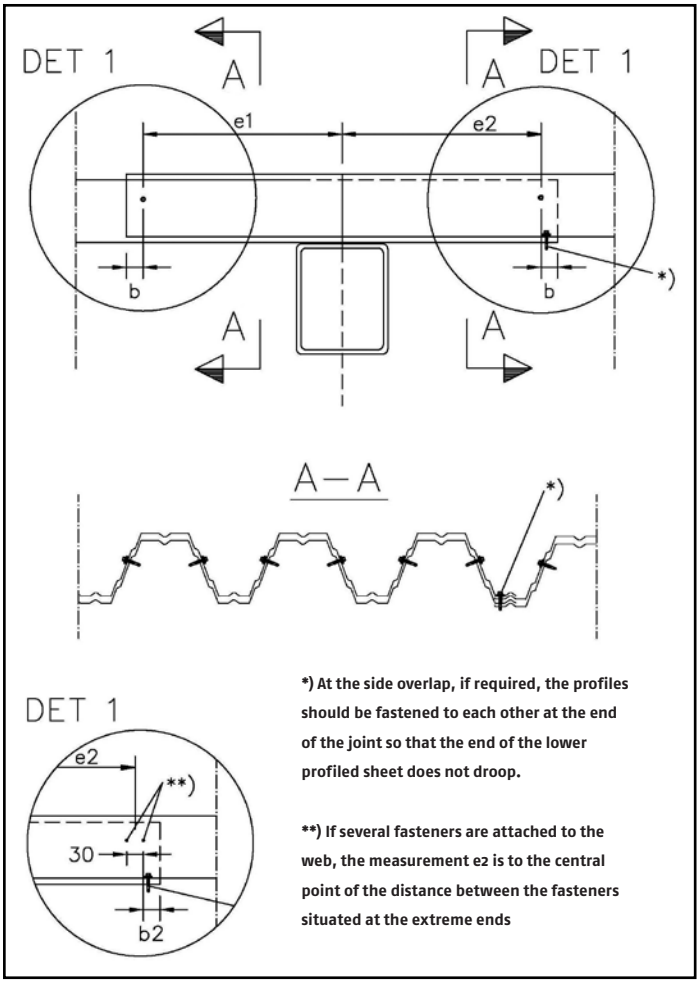

Figure 13.

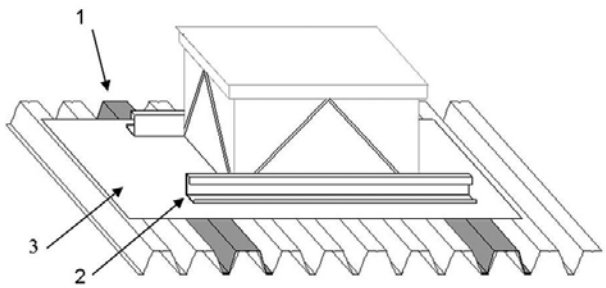

Figure 14.

2. UNINSULATED ROOF (WATER ROOF)

Delivery conditions

Profiled sheets are delivered with or without anti-condensation coating (mass). The anti-condensation coated sheets are recommended for use in uninsulated roofs, such as in car shelters, in which the underlay is not specified. This requires proper ventilation of the space to ensure the evaporation of the moisture bound to the mass. The anti-condensation coating is sprayed onto the lower surface of the profiled sheet and it binds the moisture condensation of the sheet to itself so that condensation water does not drip down. The anti-condensation coated profiled sheets are delivered with the anti-condensation coated surface facing upwards.

Two types of anti-condensation treatment are available: 600 g/m^2 and 1000 g/m^2, colour light grey. The anti-condensation coating does not burn or release poisonous gases. The mass is water-based and does not contain any harmful substances. It can be used in hygienic spaces where foodstuff is handled. The anti-condensation coating also dampens the patter of rain on the roof.

End overlapping

The end overlapping is placed in a position in which the underlying structure provides enough support. The sheets must be overlapped by at least 200 mm. Fasteners needs to be around 50 mm from the lower edge of the sheet. When using screws, the sheets should be fastened from the bottom of each profile. The overlapping extension joint can be sealed using 3x10 mm sealant strip.

Profiled sheet structures need to be designed so that variations in temperature do not cause harmful stress or deformation. Transverse thermal expansion and shrinkage does not usually cause problems because thermal expansion causes only small deformations in the profile shape. However, the forces at work along the corrugation can become significant along long roof unless the lengthwise changes are allowed to take place freely. The structural designer needs to ensure that the joints at the ends of the corrugated sheets are able to move sufficiently, that the fasteners are strong enough and that the structures attached to the corrugated sheet are flexible enough. See Figures 15, 16 and 17.

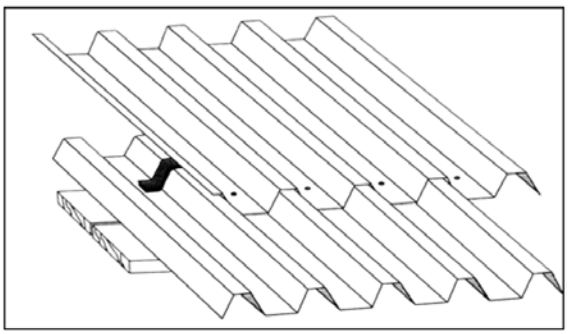

Figure 15. Profiled sheet end overlapping.

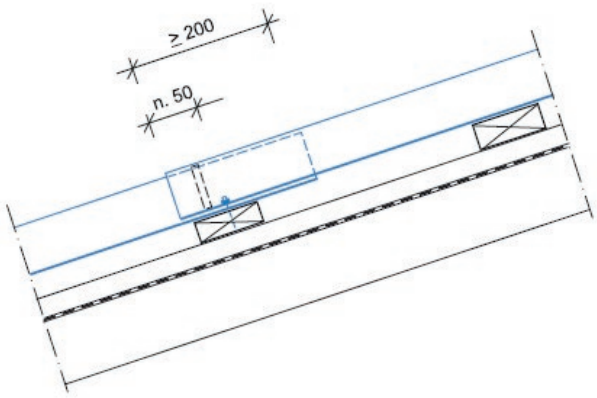

Figure 16. Profiled sheet end overlapping.

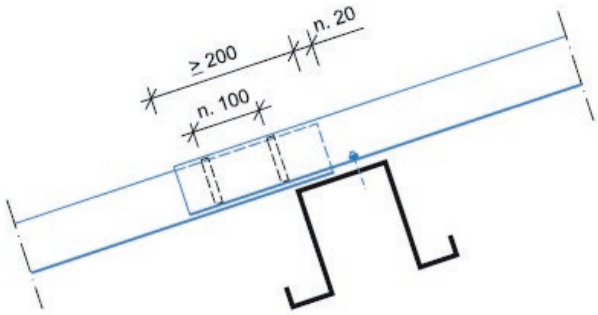

Figure 17. End overlap with thermal expansion allowance.

Fastening close to support

When attaching profiled sheets to the purlin, it is recommended that twice the number of fasteners be used in the profile nearby the purlin support. See Figure 18.

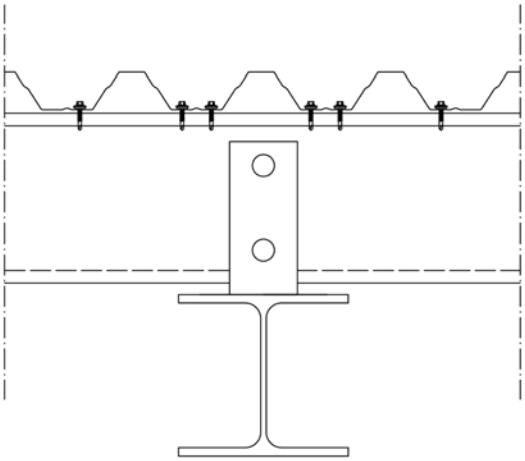

Figure 18. Fasteners near purlin support.

Roof pitch

Table 4.0 shows the overlapping of profiled sheets. The type of overlap depends on the roof pitch and the profile height. In long, gently sloping roofs, the water level can rise considerably during heavy rain. If the water level rises over the profile sheet, it generates water pressure which could endanger the water tightness of the roof. For the above-mentioned reasons, it is recommended that either higher profiles or additional side overlapping in the case of shallow profiles is used.

Table 4.0 Overlapping of profiled sheets according to roof pitch

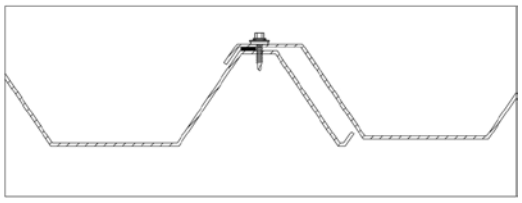

Profiled sheet (height 30 ≤ h < 50 mm)
Sheets with capillary groove e.g. ProfileT45
– ½ wave overlap and sealant.
Roof pitch steeper than 1:10.

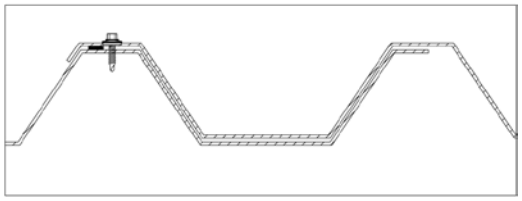

Profiled sheet (height 30 ≤ h < 50 mm)
Sheets without capillary groove e.g. T45
– 1½ wave overlap and sealant.
Roof pitch steeper than 1:10.

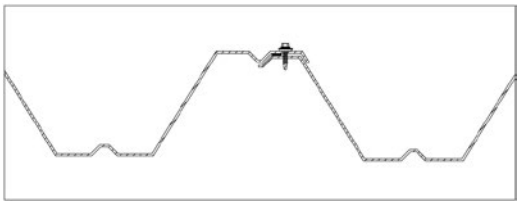

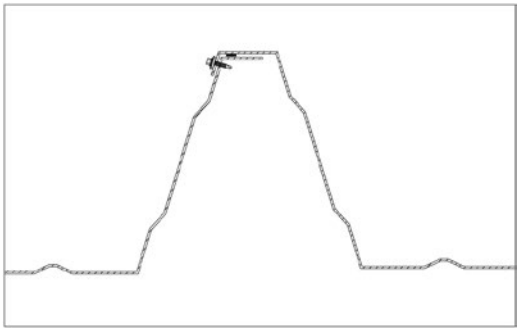

Profiled sheet (height 30 ≤ h < 153 mm)
Load-bearing profiled sheets e.g.
Profile T70L, 153L ja T130M
– ½ wave overlap and sealant.
Roof pitch steeper than 1:10.

Side overlapping

The normal side overlap for an exterior roof is a so-called ½ wave overlap. In gently sloping roofs, the water tightness can be improved by using more overlaps than recommended.

Roofing sheets need to be fastened to each batten at the side of overlap joints. Overlapping screws with EPDM seals, or bulb-tight rivets are used for fastening two sheets together. The maximum distance between fastening points is 500 mm. For roofs where the stressed skin effect of the corrugated sheet is utilised, the number of fasteners must be checked separately by the designer. See Figures 19 and 20.

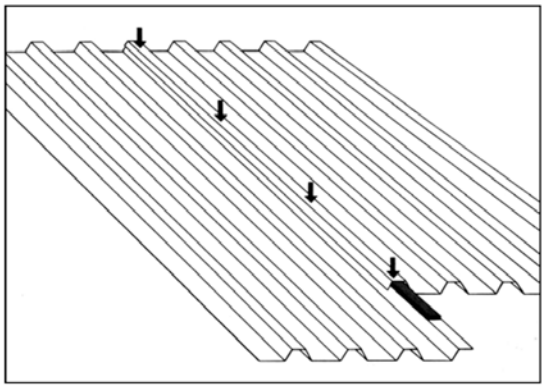

Figure 19. Sealing and fastening profiled sheet's side overlap.

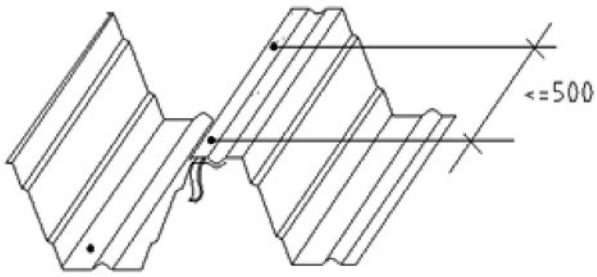

Figure 20. Fastening profiled sheet's side overlap.

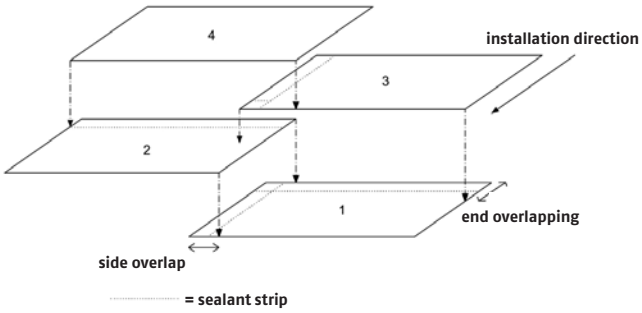

Figure 21. Side and end overlapping of profiled sheet when using sheets without capillary grooves.

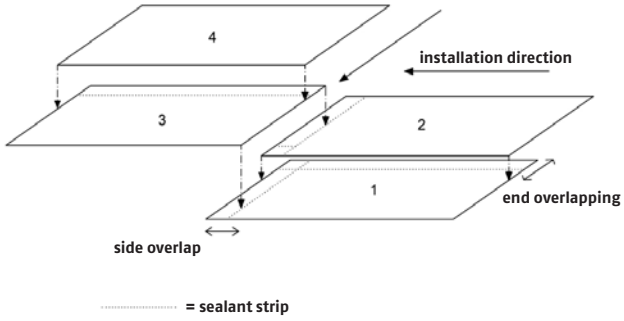

Figure 22. Side and end overlapping of profiled sheet when using sheets with capillary grooves.

Fasteners

Note! The types and numbers of fasteners need to be designed on a case-by-case basis.
When choosing fasteners take into account:

- fasteners's material according to the environmental class
- EPDM sealed washers in external application
- number and diameters of screws according to casespecific calculations
- the length of the screw according to pull-out resistance, when attaching to wood surface

See Figure 23.

Types of fasteners:
1. SD screw (self-drilling)
2. TDB tapping screw (blunt tip, self-tapping)
3. TDA tapping screw (sharp tip)
4. SL drilling overlapping screw
5. SW drilling wood screw
6. Spike metal anchors

Further attributes:

T15
T16 = EPDM sealed washers
A14
S19 = flanged, not watertight
H15

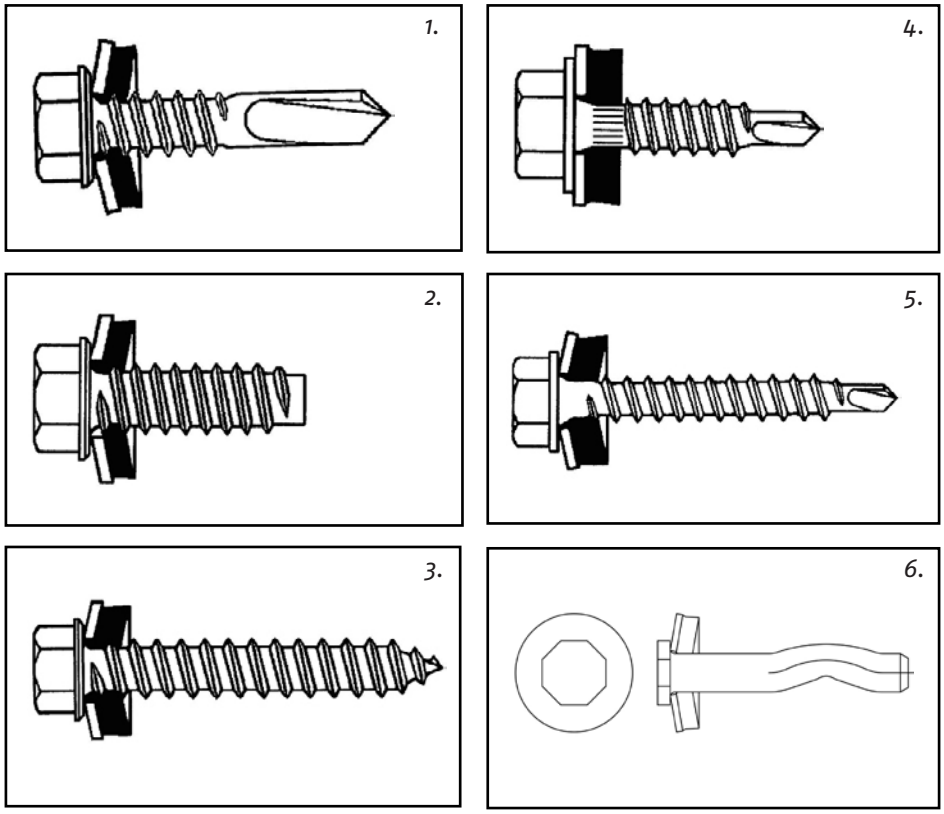

Figure 23. Types of fasteners

Fixing profiled sheet to structural steel

The load-bearing sheets are fixed to the steel base with screws or cartridge nails. The screws need to be either self-drilling (drilling screws) or self-tapping (tapping screws). The self-drilling screws' slightly higher price is made up by their installation speed. Drilling the hole, tapping and sturdy fixing all take place in one step. The joint maximum thickness for the base and the sheet is 12 mm.

Self-tapping screws require pre-drilled holes, measuring approx. 0.5 mm less than the screw's shaft, which the screw then taps as it is attached. The outside diameter of the screws is usually 4.8–6.3 mm.

The minimum thickness of the base structure is 2–4 mm, depending on the attached sheet's thickness.

The cartridge nails are attached with a special nailer. Usually Ø 4.5 mm nails are used. The minimum thickness of the base is 6 mm. The maximum material thickness of the sheet is 1.5 mm. When attaching more than one sheet (at most 4) at one time, the combined material thickness of the sheets should be at most 4 mm. The tensile and compression strength's specific value (fy) should be no more than 4 mm.

Table 1. Fixing profiled sheet to structural steel

Type of screw (examples)	Wall thickness of support (minimum) mm	Wall thickness of support + thickness of profiled sheet (maximum) mm	Combined thickness mm
SD6-T15-5.5 x 28	1.5	6	13
SD14-T15-5.5 x 34	4	14	12
SD6-H15 5.5 x 25	1.5	6	13
TDB-S-6.3-S16-6.3 x 19	9	5.5 – 5.95	15
TDB-T- H15 6.3 x 19	3	5.5 – 5.95	15

Note! Flanged H15 type not watertight.

Fastening profiled sheet to light-weight purlin

Table 2. Fastening profiled sheet to light-weight purlin

Type of screw (examples)	Thickness of purlin (minimum) mm	Thickness of purlin + thickness of profiled sheet (maximum) mm	Combined thickness mm
SD3-T15-4.8 x 19	1	3	6
SD6-T15 5.5 x 28	1.5	6	13

Attaching profiled sheet to wood

The load-bearing sheets are attached to a wooden base using screws. The usual diameter for the screws is 6.5 mm. The designer should check the correct length for the screw (necessary penetration length for wood) on a case-by-case basis.

Table 3. Fastening profiled sheet to wood

Type of screw (examples)	Drilling thickness (maximum) mm	Pre-drilling mm
SW3-T-H15-S16- 6.5 x 50 *	3 x 1.5	

* not Ruukki warehouse stock
Note! Flanged H15 type not watertight

Overlap joint of profiled sheet

Table 4. Overlap joint of profiled sheet

Type of screw (examples)	Application area (minimum)	Application area (maximum)
SL2-T-A14 4.8 x 20	0.3 + 0.4	2 x 1
SL2-S-A14-5.5 x 22 *	2 x 0.4	2 x 1
SL3-H15-S16-6.3 x 32 **	2 x 1.0	2 x 1.0

* not Ruukki warehouse stock
** not Ruukki warehouse stock
Note! Flanged H15 type not watertight

Structural end overlapping of profiled sheets

Table 5. Structural end overlapping of profiled sheets

Type of screw (examples)	Application area (minimum)	Application area (maximum)
SL2-H15-6.3 x 20*	2 x 0.63	2 x 1
SL3-H15-6.3 x 32*	2 x 1.1	2 x 1.5
SL3-H15-S16-6.3 x 32 **	2 x 1.0	2 x 1.0

* not Ruukki warehouse stock
** not Ruukki warehouse stock
Note! Flanged H15 type not watertight

Attaching profiled sheets to concrete

Attaching profiled sheets directly to a concrete surface should be avoided. A steel or wooden base (designer needs to take into account transfer of loads) should be made for the profiled sheet during casting. If the profiled sheet needs to be attached directly to the concrete, for example, a 5 mm sealant strip needs to be installed between the sheets and the concrete.

The sheets can be fastened with e.g. Spike metal anchors. An approx. 45 mm deep hole needs to be drilled in the concrete, passing through the sheet, after which the fastener is struck into the hole.

Note: Spike metal anchors are sealed for improved pull-through, tensile and punching sheer resistance.

Table 6. Attaching profiled sheets to concrete

Spike anchor	Structural thickness (maximum)	Drill
Spike DT-S19-6.3 x 38	6	6.3 x 110
CONFIX 5 x 45 A2 + EPDM-A2 19/7	10	5 x 110
Spike DT-S19-6.3 x 51*	9	6.3 x 160
CONFIX 5 x 55 A2 + EPDM-A2 19/7	20	5 x 160

* not Ruukki warehouse stock

Technical data

Profile T45-30L-905
Effective width 905 mm
Sheet thickness 0.6 / 0.7 mm
Length 500 mm – 15 000 mm

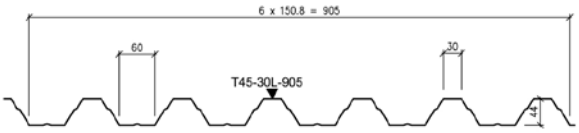

Profile T45-30LW-905
Effective width 905 mm
Sheet thickness 0.6 / 0.7 mm
Length 500 mm – 15 000 mm

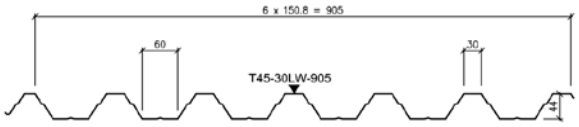

Profile T70-57L-846
Effective width 846 mm
Sheet thickness 0.6 / 0.7 mm
Length 600 mm – 15 000 mm

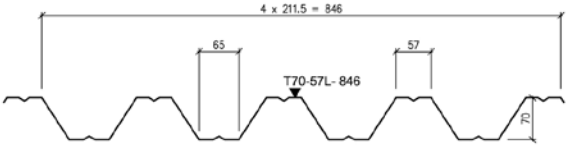

Profile T70-57L-1058
Effective width 1058 mm
Sheet thickness 0.7 / 0.8 / 0.9 / 1.0 mm
Length 600 mm – 15 000 mm

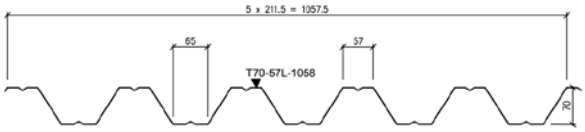

Profile T153-40L-840
Effective width 840 mm
Sheet thickness 0.7 / 0.8 / 0.9 / 1.0 / 1.2 / 1.5 mm
Length 800 mm – 18 300 mm

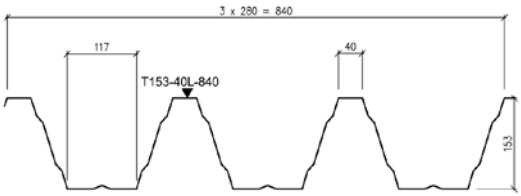

Profile T130M-75L-930
Effective width 930 mm
Sheet thickness 0.7 / 0.8 / 0.9 / 1.0 / 1.2 / 1.5 mm
Length 800 mm – 18 300 mm

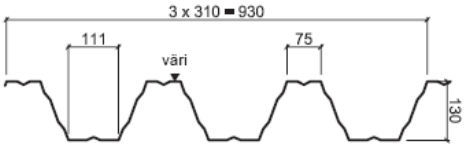

- **Our costumer service will be happy to give you more information.**

Sales +358 20 59 150
Technical Customer Support +358 20 592 7776

Ruukki Construction Oy, Panuntie 11, 00620 Helsinki, Puh. 020 59150 www.ruukki.com

The information given on this data sheet has been carefully checked. Ruukki Construction Oy does not, however, assume any responsibility for errors or omissions, or any direct or indirect damage caused by incorrect application of the information. Right to changes reserved.

Copyright© 2022 Ruukki Construction Oy. All rights reserved.

Ruukki and Ruukki's product names are trademarks or registered trademarks of Rautaruukki Corporation, a subsidiary of SSAB.

Datasheet version no. 09.2022/LSB