Detta dokument finns även att ladda ner som elektroniskt dokument på https://norscand.com/resurser
This document is downloadable as an electronic document (.pdf) at https://norscand.com/en/resources

EL SCHEMA / CIRCUIT DIAGRAM

YAMAHA FS1/FS1DX 1980-

För kabelstam / For wire harness (art.no 07-13-501)

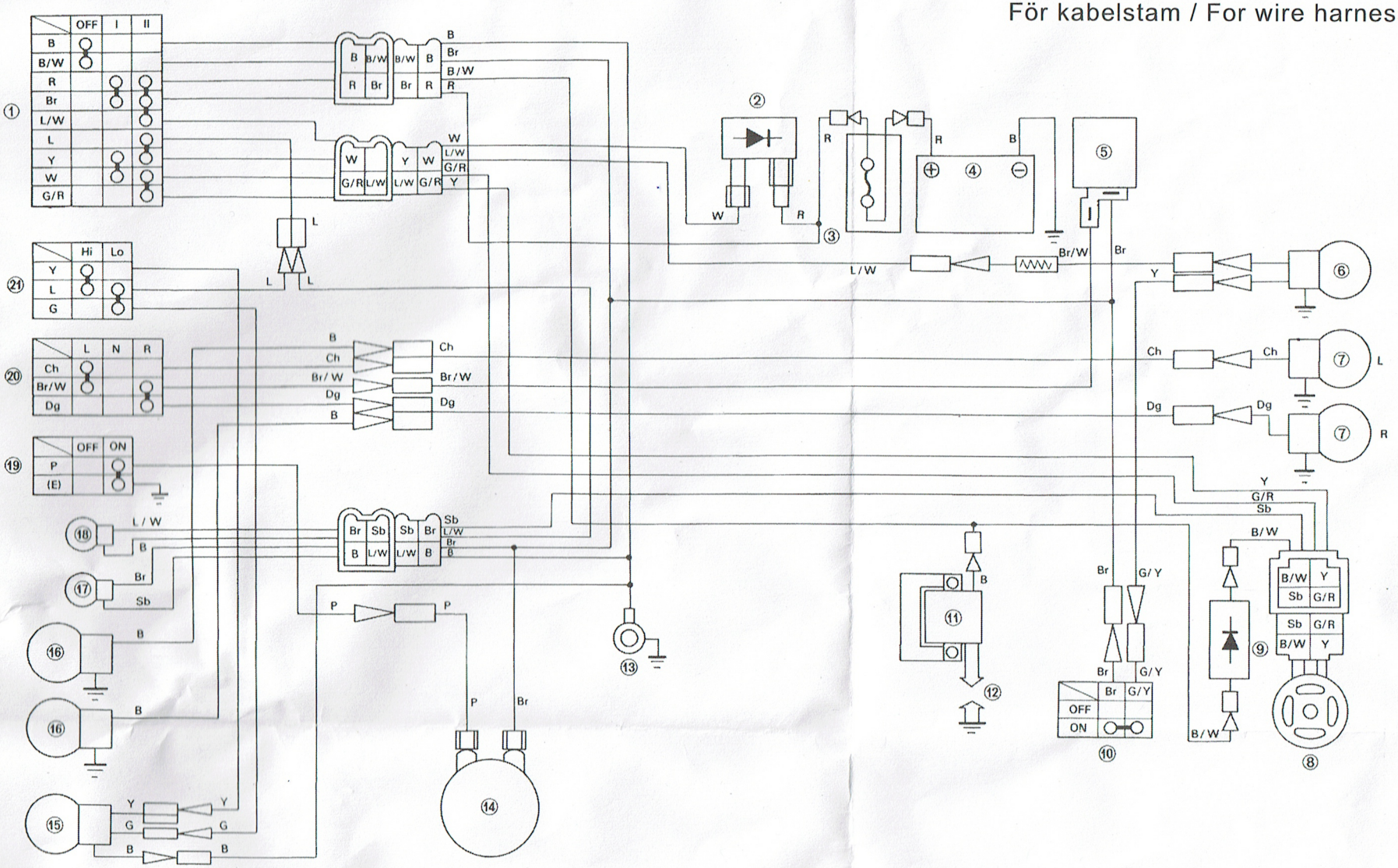

COLOR CODE

G . . . . . Green
Br . . . . Brown
Ch . . . . Dark Brown
Dg . . . . Dark Green
Sb . . . . Sky Blue
E . . . . . Ground
B . . . . . Black
R . . . . . Red
L . . . . . Blue
Y . . . . . Yellow
W . . . . White
P . . . . . Pink

Norscand Technologies Sweden (NTS) - All rights reserved