CUSTOMER DETAILS	
OEM PUMP PART NO	840557
MANUFACTURER	VOLVO PENTA
ENGINE	2001 B, 2001/2/3 R, 2002 B, 2003 B, 2001, 2001B, 2001AG, 2001BG, 2002, 2002B, 2002D, 2002AG, 2002BG, 2003, 2003B, 2003D, 2003AG, 2003BG, 2003T, 2003TB, 2003 SOLAS, 2003B SOLAS, 2003TB SOLAS, 120S-A, 120S-B, 120S-D, 120S-E, 120SC, MS2A, MS2A-D, MS2A-E, MS2A-S, MS2B, MS2B-A, MS2B-L, MS2B-R, MS2L, MS2L-D, MS2L-E, MS2V, 2003TR, 2001R, 2003R, 2003R SOLAS
PUMP DESCRIPTION	F35B-902 IMPELLER PUMP OEM

PART LIST

DRAWING POSITION	COMPONENTS	COMPONENT DESCRIPTION	QTY	IMPELLER KIT	WEAR KIT	SHAFT KIT	SCREW KIT
1	01-24177	PUMP BODY F35B-902	1				
2	01-45543	SHAFT F35B-902	1			X	
3	01-42415	CAM 1/2 F35B-	1		X		
4	01-47761-1	END COVER F35B	1		X		
5	08-808B-1	IMPELLER F35 MC 97	1	09-808B-1			
6	01-46676	WEAR PLATE F35B-8 SS	1		X		
7	01-42400	PIN F35B-/F7B/F70B	1		X		
8	01-45542	SPACER D12X16X4.3	1			X	
9	01-43240	GASKET F35B-	1	09-808B-1	X		
11	0.0141.700	SCREW M4X8 ISO4017 A2-70 SLOTTED	4		X		
12	01-46794-10	SCREW 8-32UNCX7	1		X		
13	01-46790-01	WASHER D7.5XD4X1 CU	1		X		
14	0.2233.010	LIP SEAL 12X24X7 DPSM	2		X	X	
15	0.2173.432	O-RING 11.3X2.4 SS1586 NBR70	1			X	
16	0.3431.441	BALL BEARING 6001 ST	2			X	
17	0.0371.028	RETAIN. RING BORE D28 DIN472 SPRST	1			X	
18	0.0415.342	COIL PIN 4X36 DIN7343 ST	1			X	
19	01-45694	SPACER F35B-9	1			X	
20	01-47826-2	MARKING TAG	1				

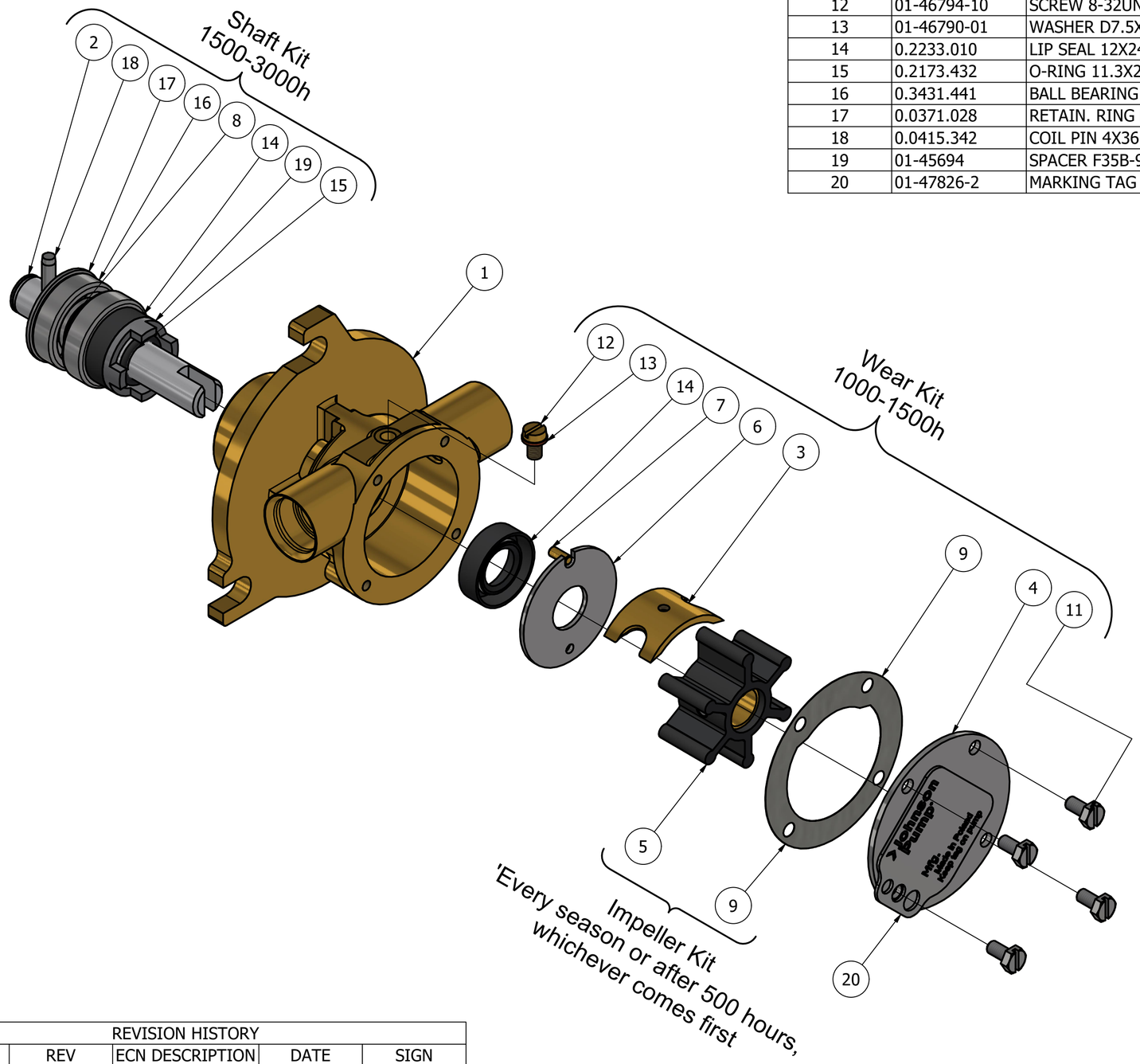

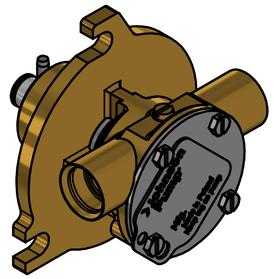

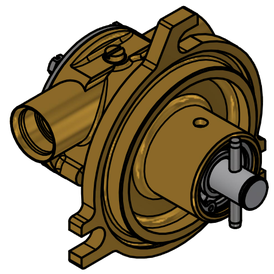

ISO VIEW

REVISION HISTORY				
ECN	REV	ECN DESCRIPTION	DATE	SIGN
	P01		19-Nov-2024	M.G

UNLESS OTHERWISE STATED THE FOLLOWING APPLIES:
Ra in µm ISO 1302
FACES WITHOUT TOLERANCES ACC. TO ISO 2768 - mK

	NAME	DATE
DRAWN	M.G	11/19/2024
REVISED		
APPROVED	M.G	

MASTER
MATERIAL
WEIGHT 0.8 kg

The component or product design and specified according to this drawing must comply with applicable EHS laws and EU-directives

STATUS WorkInProgress
TYPE F35B-902
SCALE 1 : 1.5
PROJECTION METHOD ISO 128

DIN ISO 13715
Outside edge -0.25
Inside edge +0.5

PROJECT NUMBER 2652

SPXFLOW
Johnson Pump

DESCRIPTION
EXPLODED VIEW OF F35B-902 IMPELLER PUMP OEM

DRAWING NUMBER 10-24707-01
REVISION P01

Size A2

This Drawing/Document and information shown contains proprietary information of SPX FLOW and must not without permission and written consent be reproduced, copied, transmitted, transferred, disclosed, undue use, shown or handed out to any unauthorized person and is to be maintained in confidence.

© COPYRIGHT 2022, SPX FLOW EUROPE LTD - Sweden Filial, NASTAGATAN 19, SE-702 27 ÖREBRO, SWEDEN