Chassis Assembly Montage du châssis
Chassis シャーシ展開図

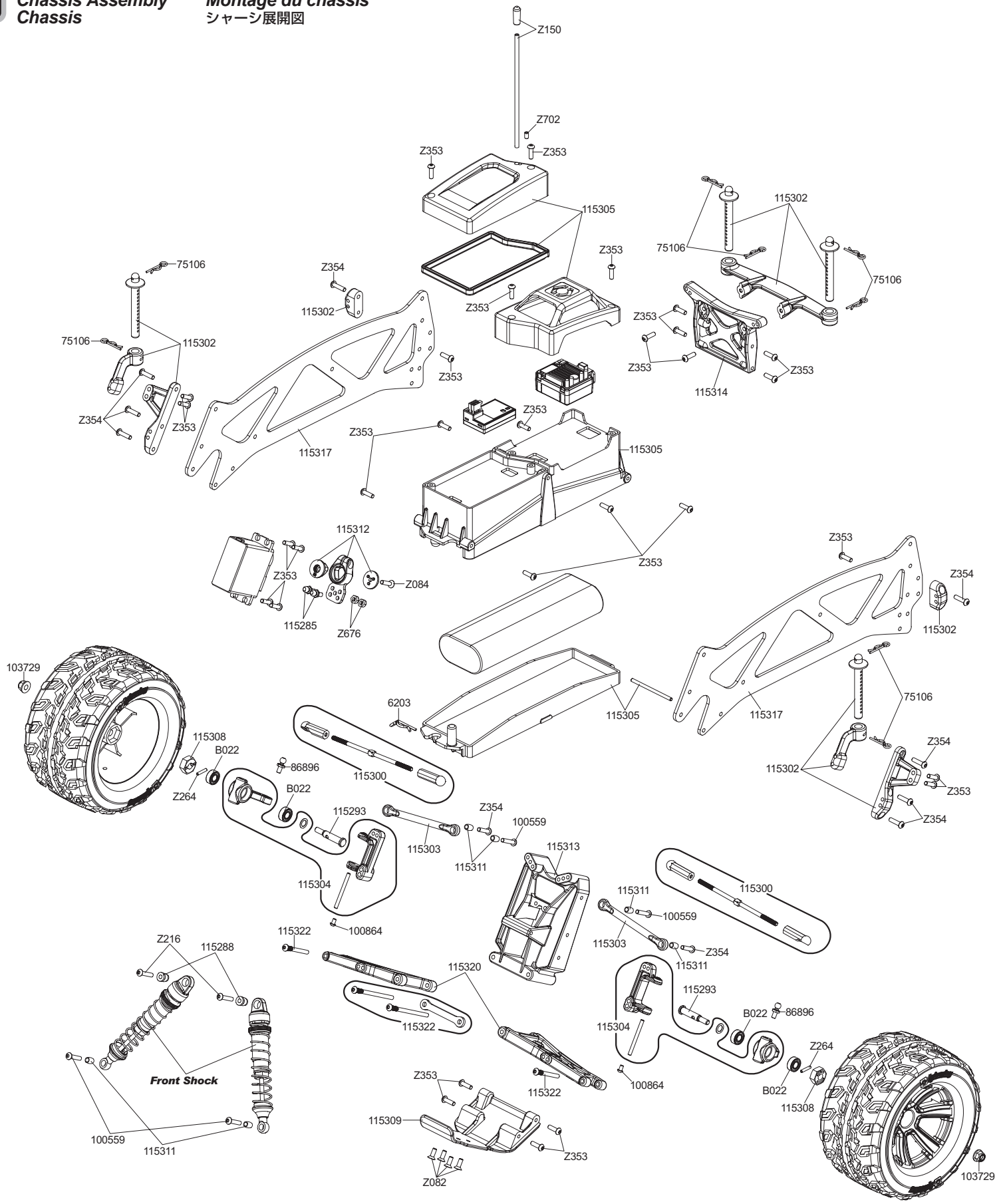

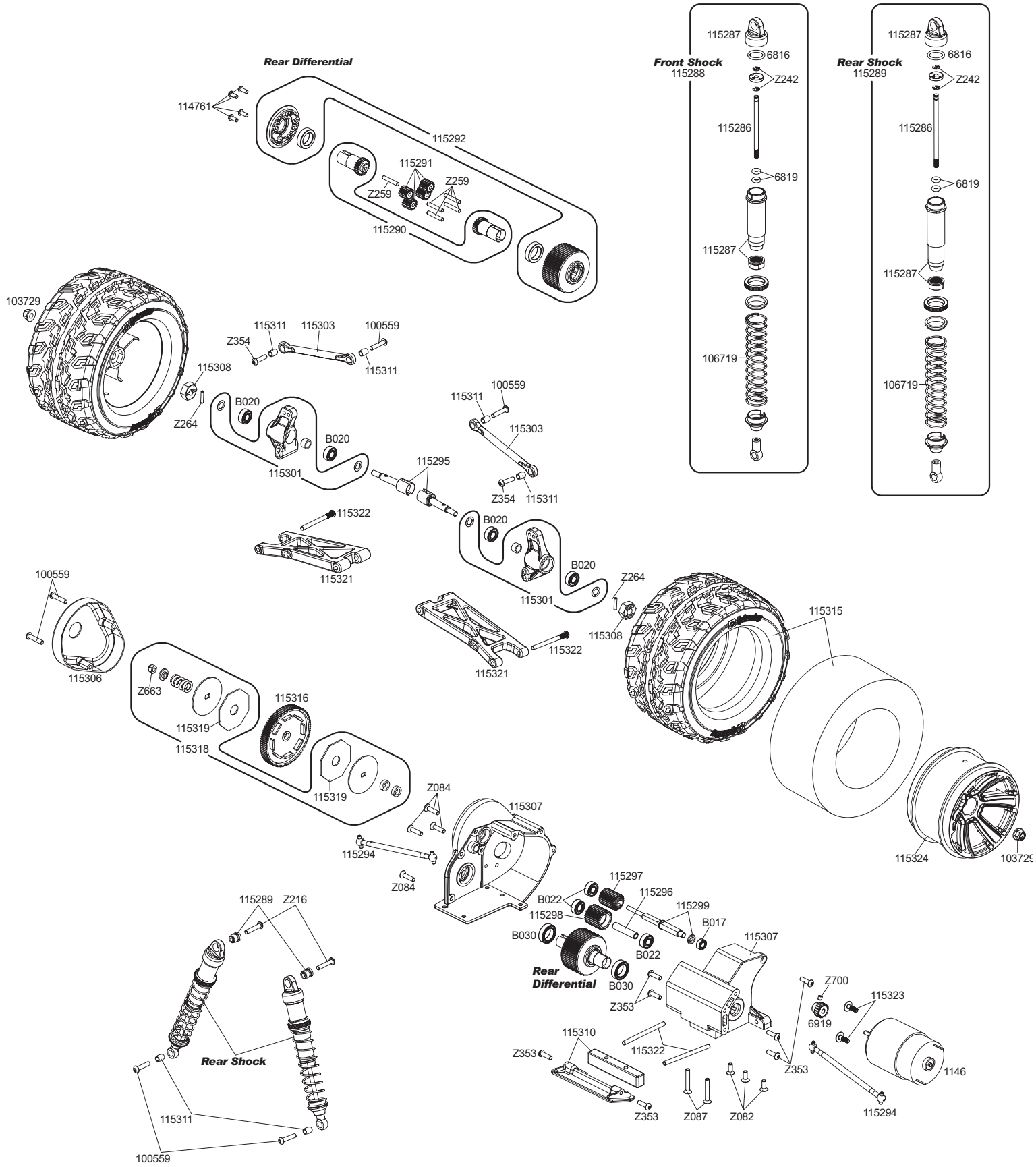
Rear Differential
114761
115292
115291
Z259
Z259
115290
Front Shock
115288
115287
6816
Z242
115286
6819
115287
106719
Rear Shock
115289
115287
6816
Z242
115286
6819
115287
106719
103729
115311
115303
100559
Z354
115311
115308
Z264
B020
B020
115301
100559
115311
115303
115295
Z354
115311
115322
B020
115321
B020
115301
Z264
115308
115322
115321
100559
115306
Z663
115316
115319
115318
115319
115315
115324
103729
Z084
115307
115294
Z084
115297
115296
B022
115299
115298
B017
B030
B022
Rear Differential
B030
115307
Z353
Z700
115323
6919
115310
115322
Z353
Z353
1146
Z353
Z087
Z082
115294
115289
Z216
Rear Shock
115311
100559